MAINTENANCE MANUAL

D4B

SHOP MANUAL

HYUNDAI

MAINTENANCE MANUAL

(FOR D4B INDUSTRIAL ENGINE)

HYUNDAI

MODEL D4B
MAINTENANCE MANUAL
(FOR INDUSTRIAL USE)

HYUNDAI

FOREWORD

This Maintenance manual contains the proper operating and handling procedures, and simple inspection and maintenance procedures for the Hyundai diesel engine Model D4B for industrial use.
To insure top performance, economical and safe operation and long life, those who use and control this engine should read through this manual and strictly observe the instructions when operating the engine.
Should there arise questions concerning the Hyundai industrial diesel engine or in the event of trouble, consult with your nearest service shop.

SAFETY AND VEHICLE DAMAGE WARNING

This manual includes information titled as WARNING, CAUTION.
These titles indicate the following :

⚠ ***CAUTION***
This indicates that a condition may result in damage to your vehicle or its equipment if the caution is not heeded. Follow the advice provided with the caution.

⊗ ***WARNING***
This indicates that a condition may result in harm or injury to you or other persons if the warning is not heeded. Follow the advice provided with the warning.

※ ***If you use the Hyundai non-genuine parts or the quality problem parts, it can be caused serious damage in engine system.***

HYUNDAI MOTOR COMPANY
Printed in Korea
COMMERCIAL ENGINE DEP'T
INDUSTRIAL ENGINE ENGINEERING DPT.

The specifications are subject to change wighout notice.

CONTENTS

1. BEFORE USE 1-1
Basic engine feature introduction

2. ENGINE APPEARANCE AND COMPONENTS 2-1
Parts name on the engine appearance

3. STARTING AND OPERATION 3-1
New engine operation, check before operation, starting and stopping the engine, and operation in summer and winter

4. INSPECTION AND MAINTENANCE 4-1
Lubricants, fuel and coolant check, instruction for the long storage, each performance check and maintenance

5. PERIODIC CHECK 5-1
Routine maintenance/Periodical Maintenance, trouble-shooting, Oil replacement, inspection and service methods

6. MAIN SPECIFICATIONS 6-1
Engine specifications and service data

1. BEFORE USE

PERIODIC INSPECTION

It is quite essential for the engine to have periodical inspection and maintenance service so as to prolong its life and secure safety. The procedure of check is described in "PERIODIC CHECK AND SERVICE CHART"

HYUNDAI GENUINE PARTS

Please use Hyundai Genuine Parts, Oil/Grease and Optional Equipment. All Hyundai Genuine Parts are identified with the mark shown above.

ENGINE NUMBER

Please specify the engine model and engine number when ordering parts or in the event of trouble. The engine number is stamped at the position shown above.

EX) D4BB X 000001

- 000001 — Engine Number
- X — Product year
- D4BB — Engine model

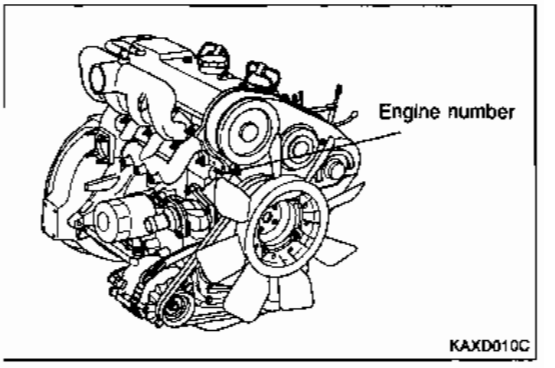

ENGINE NAMEPLATE

The nameplate is mounted at the position shown in the illustration above.
The nameplate shows the engine model, total displacement, output, valve clearance, fuel injection order and fuel injection timing.

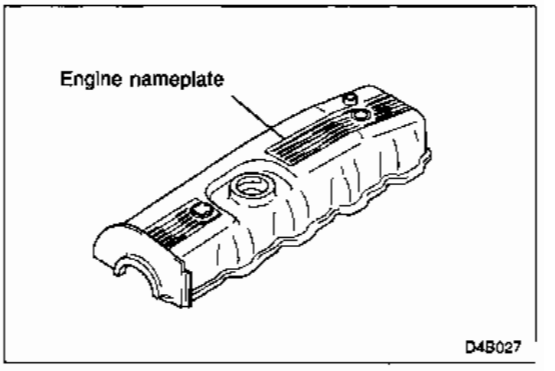

Indication Method

1. GENERAL

① Engine model
② Total displacement
③ Rated output

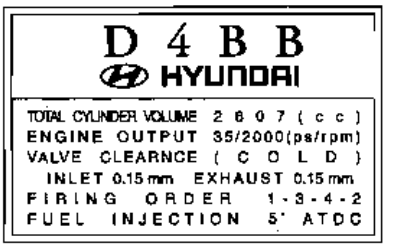

<NAME PLATE : General>

D4B029

2. EC certification number

① Engine model
② Total displacement
③ Rated output
④ EC certification number

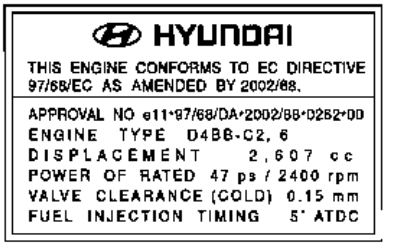

<NAME PLATE : EC Certification number>

D4B-EC

⚠ ***CAUTION***

The terms "front and rear", "right and left", "clockwise and counter clockwise" are used in this manual as shown above.

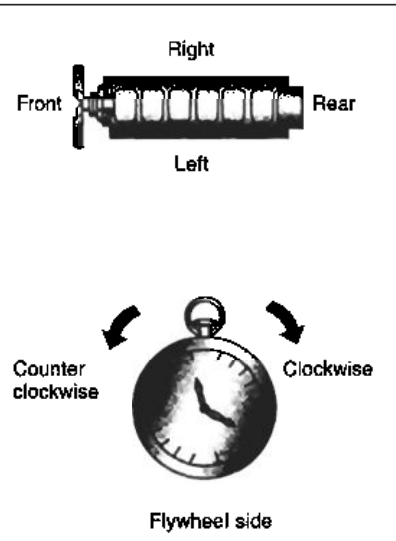

D4B001

2. NAMES OF ENGINE PARTS

D4BB REFRIGERATOR CAR ENGINE

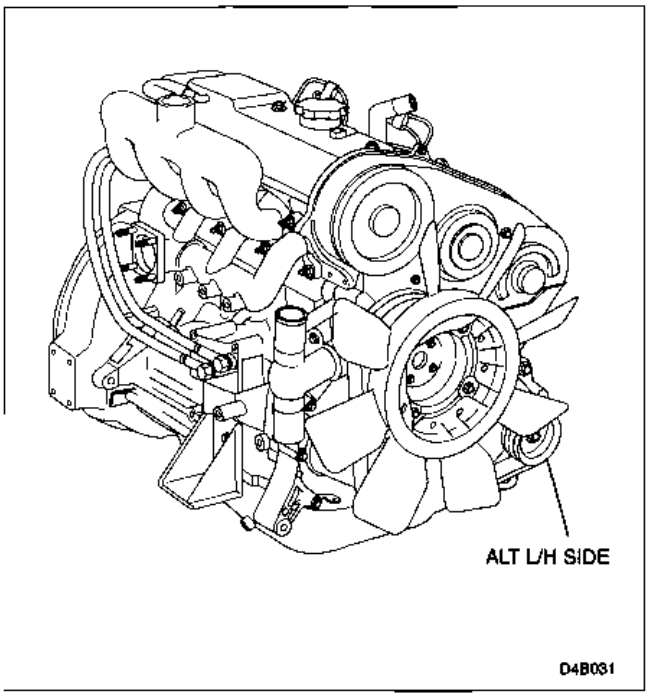

D4BB POWER UNIT ENGINE

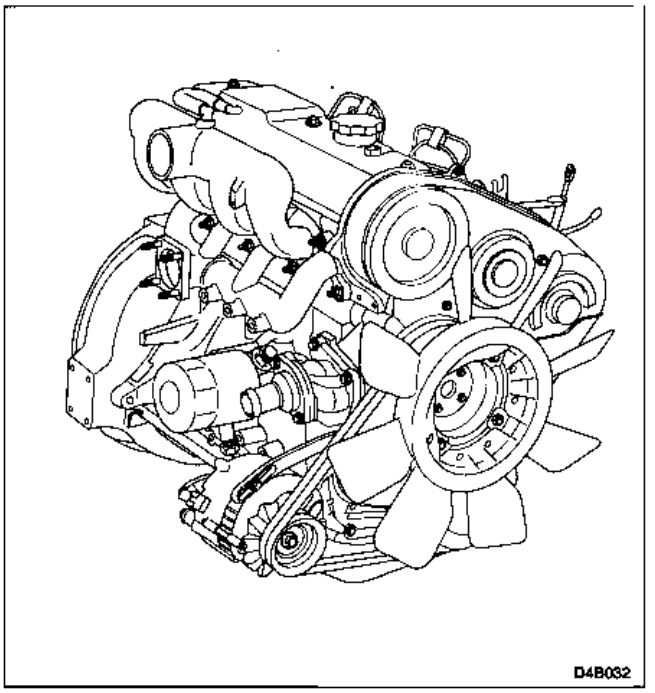

D4BB FORK LIFT ENGINE

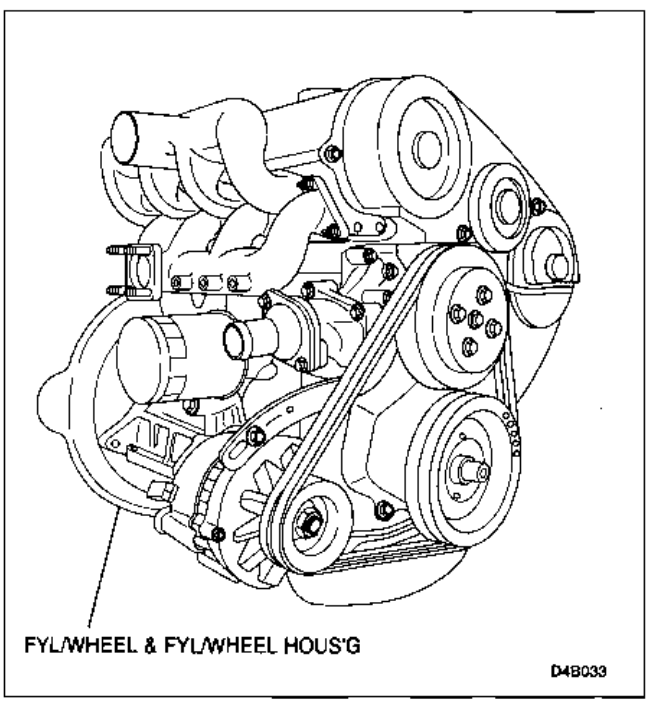

D4BB BUS AIRCON ENGINE

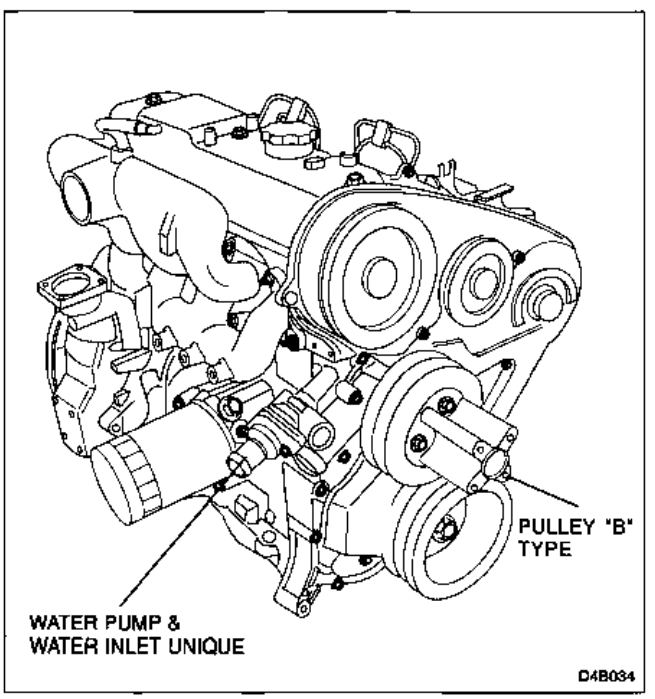

D4BB GENERATOR (4Pole)

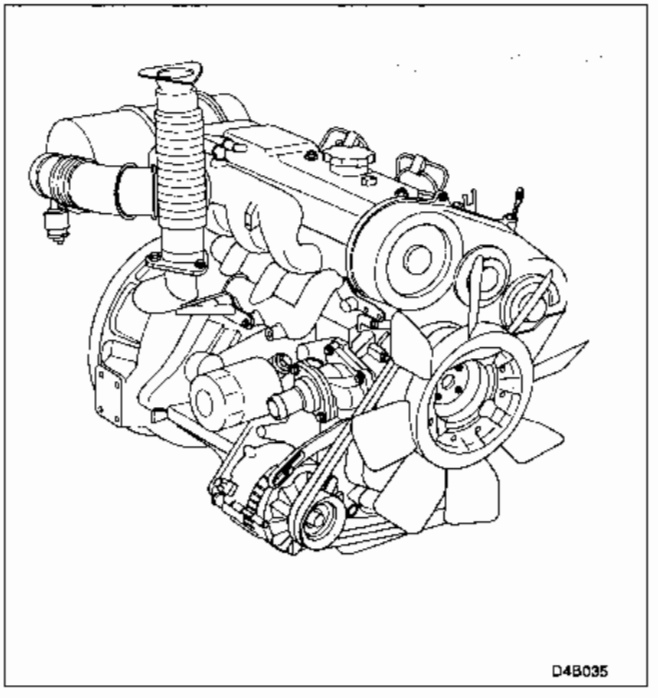

D4BB GENERATOR (2Pole)

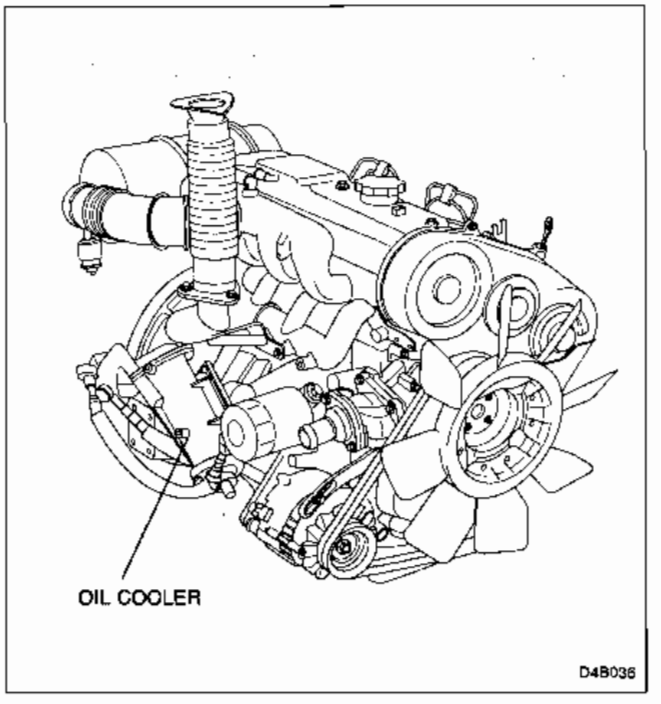

D4BB TURBO CHARGER ENGINE

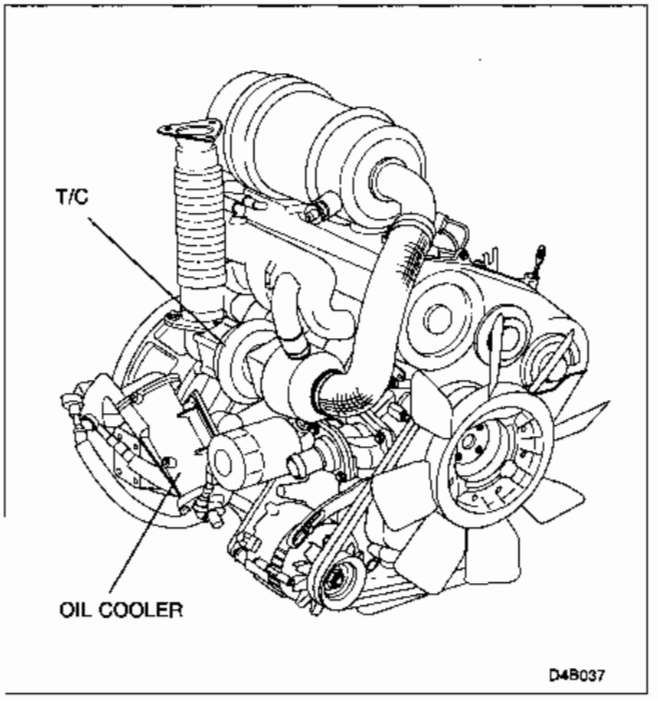

D4BF EXCAVATOR ENGINE

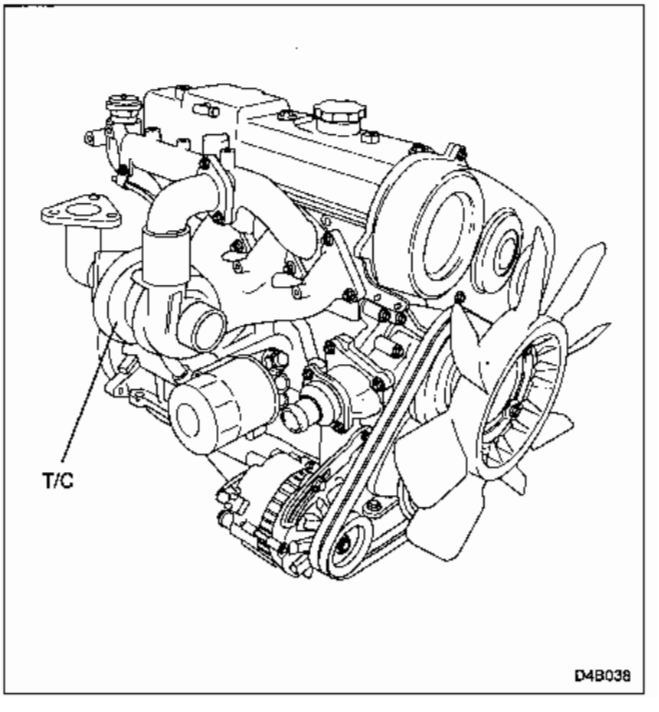

3. STARTING AND OPERATION

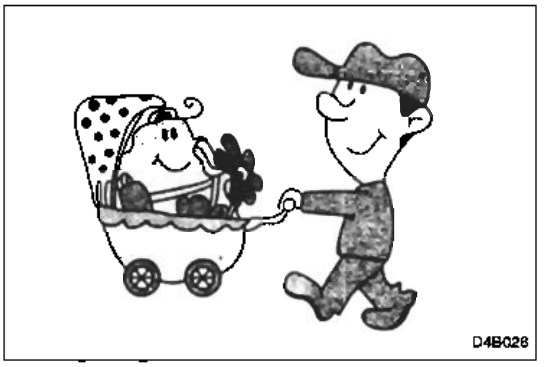

HANDLING OF NEW ENGINE

A good start is important for everything. The life and performance of a new engine depend largely on how it is handed at the early stage.

Especially on new engine, observe the following points.

INITIAL CHECK

When the service meter(hour counter of the tachometer) reads initial 200 hours or after 3 months, Whichever occurs earlier, have your engine checked at your nearest service shop.

OPERATION OF NEW ENGINE

Your new engine is broken in during the first 60 hours. To smooth away high spots of moving parts and maintain high performance, pay special attention to the following points.

1. Allow the engine to warm up after starting.
2. Avoid racing the engine.
3. Limit load to 70% maximum.
4. Avoid changing Extreme load.

REPLACING OIL

On a new engine, replace the following oils after the first 60 hours and 250 hours of operation.

After the first 60 hours	Engine oil
After the first 250 hours	Transmission gear oil, Bearing case oil

PRE-OPERATIONAL CHECKS

To ensure safe and smooth operation at all times, check the following points before starting a day's operation.

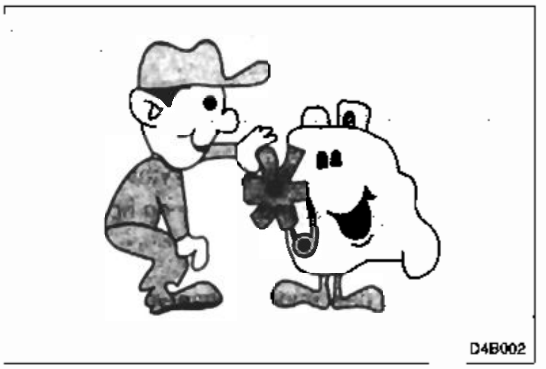

CHECKING ENGINE OIL LEVEL

Remove the oil level gauge, wipe clean with a cloth, reinsert and remove again. If the oil level is between the upper and lower notched lines, the oil level is good.
If the oil level is low, add oil through the oil filler. At the same time, check the oil for contamination and viscosity, and replaced as necessary. Check for oil leaks, too.

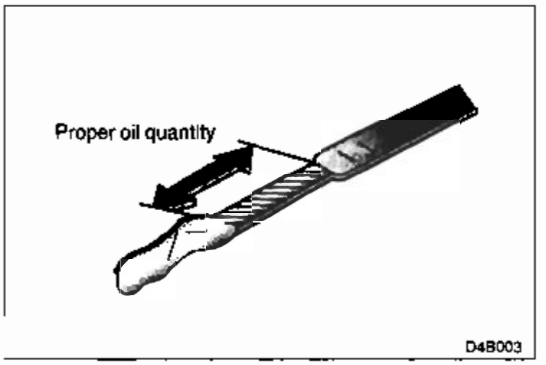

⚠ ***CAUTION***

- ***With the engine placed on a flat surface, inspect the oil level before starting the engine or about 30 minutes after it has stopped.***
- ***Allow 5 to 6 minutes between addition of engine oil and checking of oil level. If the oil level is checked immediately after addition of engine oil, excessive oil will be added because the oil level may be checked before all added oil falls down.***

CHECKING FUEL LEVEL

Check to ensure that the fuel tank is filled. Check for fuel leaks, too. To start an engine after a long period of shutdown or after fuel has run out, the fuel system should be bled beforehand. For bleeding procedure.

CHECKING COOLANT LEVEL

Check the coolant level in the radiator or coolant tank.

⚠ ***CAUTION***

- ***Use soft water.***
- ***If the coolant in the cooling system is a mixture of water and anti-freeze or anti-rust, addition of only water will lower the concentration of the coolant. Mix water with anti-freeze or anti-rust at the same mixing ratio as the current coolant in the system and add this mixture.***

WATER LEAKS

Check for water leaks from the radiator, radiator hose and other parts of the cooling system. Check also for traces of water leaks under the engine.

TENSION OF V-BELT

Press down the mid point of the belt with a finger to check the deflection. Check the V-belt for oil or grease, damage, etc. For tension adjustment procedure.

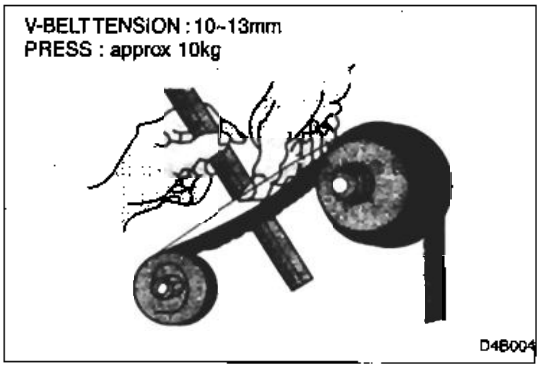

DEFECTIVE POINTS FOUND ON PREVIOUS DAY

Check the points found defective during the previous day's operation to confirm that there is nothing that may hinder operation.

CORRECT OPERATIING PROCEDURES AND HANDLING

Before starting the engine, be sure to perform pre-operational checks.
Some machines may call for different procedures for their starting and stopping. Refer to the operator's manual delivered with the machine.

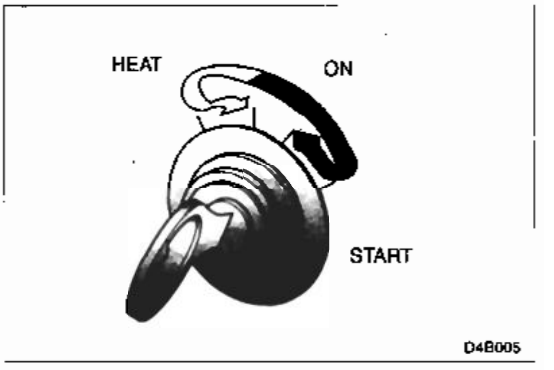

ENGINE STARTING(MANUALLY)

1. Confirm that the engine is at no load. On an engine with a clutch, disengage the clutch by operating the clutch lever as this will facilitate starting.
2. Set the battery switch to ON.

   ⚠ ***CAUTION***
   During operation of the engine, do not place the switch to OFF. Operation of the engine with the switch in OFF position will result in failure of the electrical system. In addition, each gauge or switch becomes inoperative, causing a hazard.

3. Insert the key into the starter switch Position.
4. Place the control lever to the FULL Position.
5. Turn the key to the grow plug position. It will take approximately 20 to 30 seconds for the indicator to become red, indicating that the air heater is sufficiently heated up. At normal ambient temperature, the use of the air heater is not necessary.

   ⚠ ***CAUTION***
   - ***Avoid repeated use of the grow plug which consumes large power. Otherwise, a run-down battery will result.***
   - ***If the grow plug indicator does not become red hot, it means that the fuse of the grow plug relay has blown.***

6. Next, turn the key to "START" position and the starter will turn and the engine will start.

⚠ ***CAUTION***

- ***When you cannot start the engine by a single attempt, operate the starter for 10 to 15 seconds and keep it stationary for 10 to 15 seconds before making another attempt. In cold weather the engine may be harder to start. Even in such a case, avoid operation the starter continuously for more than 30 seconds.***
- ***After a long period of shutdown or after engine oil change or replacement of oil filter element, operate the starter to crank the engine(at no load) for 15 seconds without fuel injection to make sure that the oil spreads throughout the engine before starting the engine.***
- ***When restarting the engine, confirm that the engine has completely shut dow n.***
- ***Do not turn the key to the "OFF" position during operation.***

7. After the engine has started, return the control lever to the low idling position to allow the engine to warm up.

⚠ ***CAUTION***

Confirm the engine to warm up for more than 5 minutes. The warm-up period is required for allowing the oil to spread throughout the engine and assuring proper combustion.

CHECK TO MAKE DURING WARM UP OPEATION

1. Confirm that the oil pressure builds up. During warm up operation the pointer should indicate 150kPa(1.5kg/cm2) or more(at idle). Confirm that the warning lamp goes out.
2. Check to ensure that the charge function is good and that the charge lamp is OFF.
3. Check the engine for abnormal noise, vibration and odor.
4. Check for abnormal exhaust emission color.
5. Check for oil, Water or fuel leaks from the engine.

⚠ ***CAUTION***

Avoid racing the engine, as this could cause malfunctions and troubles.

REVERSE ROTATION OF ENGINE AND STEPS TO TAKE

If reverse rotation of the engine occurs, no engine oil will be sent to the various parts of the engine, resulting in seizure and other major troubles in a few minutes. Even a fire might start because exhaust gases come out from the suction side.

How to distinguish reverse rotation of engine

1. When reverse rotation occurs, the tachometer will remain stationary. Since the oil pressure does not rise, the oil pressure gauge will remain stationary or the warning lamp will not go out but will continue to light.
2. Since exhaust gases come out from the suction side, large knock sound will be produced in the early state of reverse rotation, and the exhaust gases will be blown out form the air cleaner. When starting the engine, pay attention to the knocking sound and exhaust gases from the air cleaner.

Steps to take in the event of reverse rotation

1. If the engine is turning in reverse oil-rection, stop the engine immediately with the engine stop button.
2. After the engine has shut down, check the air cleaner and intake rubber hose and replace if necessary.

⚠ ***CAUTION***
After warm up operation, start loading the engine.

- ***Pay attention to all parts of the engine to check for abnormal noise vibration and odor.***
- ***Pay attention to exhaust emission color.***
- ***Pay attention to each meter and confirm it from time to time. The pilot lamps should be OFF during operation. If abnormal symptoms are evident, check immediately. If causes cannot be located or if correction is hard, call your nearest service shop.***

OIL PRESSURE GAUGE OR WARNING LAMP

Confirm that the oil pressure is normal and that the warning lamp is OFF.
Standard indication : 295 to 490 kPa (3 to 5kgf/cm²) at rated speed 80kPa(0.8kgf/com²) or more at idle or green zone.

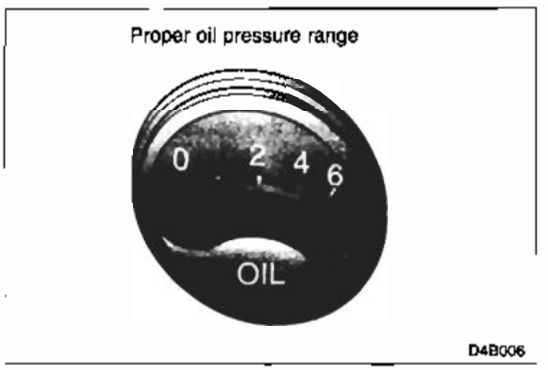

When oil pressure is abnormal

When the pointer indicates 49kPa (0.5 kgf/cm²) or less at idle or 200kPa (2.0 kgf/cm²) or less (or red zone) at rated speed or when the warning lamp lights, the oil pressure is abnormal.

1. Stop the engine immediately. Sustained operation could cause seizure of the engine bearings.
2. Check for oil leaks. If leaks are evident, correct.
3. Check the engine oil level. Add if low.
4. Check the oil filter element for clogging.
5. Check the oil pressure gauge, lamp or piping.
   In this case, the oil pressure should be actually measured with an oil pressure gauge.
6. If, after taking the above steps, the abnormal oil pressure still persists, consult with your nearest service shop.
7. In the following cases the standard oil pressure may not be indicated, but there is nothing to worry about because the oil pressure will soon return to normal.
   1) When the engine is not hot yet as immediately after starting, a high pressure may be indicated.
      After starting, therefore, do not accelerate the engine but run the engine at idle until it fully warms up.
   2) After the engine has fully warmed up, the engine will have a low oil pressure at low idle. If the pressure is more than 98kPa(1kgf/cm²), there is nothing to worry about.

WATER TEMP GAUGE OR OVERHEAT ALARM LAMP

Check to ensure that the coolant temperature is good and that the alarm lamp is OFF.

Standard indication : 75°C to 95°C or green zone.

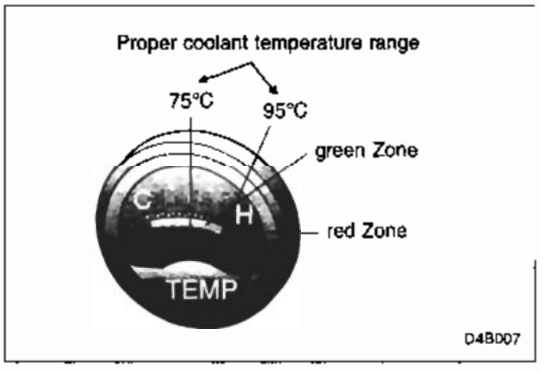

Overheating

When the pointer exceeds 100°C on a radiator-equipped engine (or when the pointer enters the red zone) or when the alarm lamp lights, it indicates that the engine is overheated.

1. Decelerate the engine to an idling speed immediately, and run the engine at idle until the coolant temperature falls. Sustained operation could cause seizure of the engine.
2. After the coolant temperature has fallen, stop the engine and check for water leaks, damaged or loose fan belt, and clogged radiator.
3. Check the coolant level. Add coolant as necessary.

WARNING

- ***Do not open the radiator cap while the coolant is hot. Hot water will gush out and you might get scalded. Raise the decompression lever of the radiator cap to relieve the pressure in the radiator.***
- ***Do not pour cold water in an overheated engine. Sudden cooling might cause cracks.***

ENGINE STOPPING

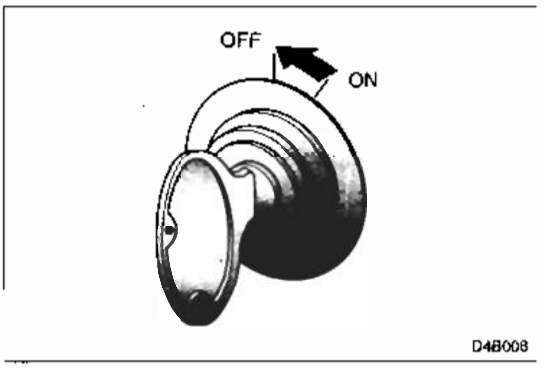

If an overheated engine is suddenly stopped without cooling it, a quick rise in coolant temperature could cause seizure of engine moving parts such as pistons.

1. After the end of your work, run the engine at idle for about five minutes before stopping it.
2. Pull out the engine stop button to stop the engine and after complete stop of the engine, depress the stop button to the original position.
3. Place the control lever to the stop position.
4. Place the key to "OFF" position to remove the key.
5. Set the battery switch to "OFF" position.

CAUTION
Leaving the switch in "ON" position for a long time will result in consumption of the battery due to flow of useless current.

CHECKS TO MAKE AFTER ENGINE STOPPING

After operation, clean the engine and perform the following checks.

1. Check and correct points found defective during operation.
2. Check each part for looseness, damage, oil and water leaks.
3. In winter, remove all coolant unless it contains anti-freeze, if the coolant is not removed, it will ve frozen ald the crankcase could be cracked.

OPERATION IN COLD WEATHER AND HOT WEATHER

OPERATION COLD WEATHER

When the atmospheric temperature is lowered in cold weather, some special attentions should be paid for operation of the engine.
Observe the following descriptions.

Engine oil

The engine oil becomes less fluid with decreasing temperature. As this makes it difficult to start the engine, use oil of viscosity adequate for atmospheric temperature. For selection of oil of adequate viscosity, see "Lubricant".

Fuel

1. As temperature falls, fuel loses its fluidity and good atomization can not be expected. Use therefore, a fuel adequate for atmospheric temperature. For details, see "Fuel".
2. Fill the tank with fuel as much as possible so the air in the tank may come out and lessen the chance of freezing moisture, rusting, and the difficulty of starting.
   Be careful not to let the rain drops and snow flakes come in the tank by fastening the cap firmly.
3. Loosen the drain plug of the tank to drain out water sometimes so as to prevent moisture in the fuel from freezing.

Battery

1. The battery capacity will decrease as the atmospheric temperature falls. Keep the battery fully charged at all times.
2. If the battery is not to be used during cold weather remove the battery and store it indoors.
3. After battery fluid has been added, or when the specific gravity is very low, charge the battery, as there is danger of freezing.

Coolant

Add anti-freeze to water to prevent its freezing. For the use of anti-freeze, see "Coolant".

⚠ ***CAUTION***
When anti-freeze is not added to the water, be sure to open each drain cock of engine crankcase, and radiator to drain off all coolant after operation so that these components may be protected against damage by freezing of the coolant.

Operational precautions

1. Increased oil viscosity and reduced battery performance will result in hard engine starting.
   If the engine cannot be started by the first attempt, allow approx. 15 seconds before making another attempt. Do not operate the starter continuously for more than 30 seconds. Do not forget to heat the engine before starting.
2. At a very low atmospheric temperature, the oil viscosity may increase to such an extent that heating of the oil pan is necessary.
3. Warm up the engine sufficiently after start-up.

OPERATION IN HOT WEATHER

Pay a special attention to cooling system as it is easier to overheat under intense heat.

Engine oil

Choose the engine oil with high viscosity fitting the temperature of climate. See "Lubricant" for selection of oil with suitable viscosity.

Battery

The battery fluid level will fall fast. Check the level frequently and make sure that the fluid level is always near the UPPER level.

Cooling system

1. Keep the coolant always filled to specified level, and check for coolant leaks.
2. Replace the coolant from time to time to clean up the cooling system. In hot weather, more scale and rust will be formed in the cooling system(radiator, in particular) and overheating could result. See the cleaning procedure of the cooling system.
3. Always check for loose fan belt and adjust belt tension as specified.
4. Operational precautions.
   1) Pay attention to the water temp gauge and oil pressure gauge.
   2) When engine overheating is evident, do not try to stop the engine abruptly bur run it at idle for a while before stopping it.

WARNING

Do not open the radiator cap while the coolant is hot. Hot water will gush out and you might get scalded. Do not pour cold water in an overheated engine sudden cooling might cause cracts.

4. INSPECTION AND MAINTENANCE

LUBRICANT, FUEL OIL AND COOLANT

Periodical replenishment and replacement oil and coolant are the key to the best maintenance, trouble-free perfor mance, and increase of service life of the engine. Please follow the instructions in this chapter.

GENERAL LUBRICATION INSTRUCTIONS

1. Lubricate every necessary part as specified in *"Periodic check and service chart"*.
2. Always apply the oil of optimum viscosity to ambient temperature. In cold weather, use of too high viscosity oil can be often a cause of difficult engine starting.
3. Prior to the lubrication, be sure to clean oil, grease gun, oil fillers, grease nipples, etc. If grease nipples or other oil filler parts are broken or bent, replace them at once with new ones.
4. If excessive leaks are noticed from oil seals or packings, etc., replace the seals or packings at once to stop leaks.

FUEL

Characteristics of diesel fuel for a high speed diesel engine such as cetane number, specific gravity, and viscosity will affect engine starting, output, consumption, injection system function, knocking noise, and exhausting smoke.
Diesel fuel containing much sulfur will deteriorate engine oil sooner, and it requires earlier replacement of engine oil with new one. Accordingly, it is recommended to use fuel oil with cetane number of 45 or more of well-known maker's products for a high speed diesel engine. Select lower viscosity fuel under low temperature.

Handing Fuel

The injection pump and injection nozzle are precision-built and lubricated by the fuel(gas oil) itself.
Therefore, use of fuel contaminated with water or dust may lead to a serious trouble.
Always use clean fuel and pay attention to the following when handling the fuel.

1. After the end of the day's work, fill the fuel tank with fuel to its capacity. This is to expel air from the tank as otherwise the moisture in the air might condense into water drops which contaminate the fuel. Also, this gives enough time for dust and water to be separated and settled before operation on next day.
2. Store the fuel in a storage tank for at least 24 hours to allow rust and water to precipitate before use.
   Use only the supernatant.
3. When filling the fuel tank from a drum, take care not to allow deposit on the bottom to be carried over into the tank.
4. Open the drain plug at the bottom of the storage and fuel tanks occasionally to drain off deposits and water.

COOLANT

Use soft water with a low impurity content as the coolant. Use of water containing salt, or water in the vicinity of a mine or spa could accelerate deposit of scale in the water jacket and corrosion of the external surface of the cylinder liner. Use anti-corrosive in got weather to prevent corrosion and use anti-freeze in cold weather to prevent freezing of the coolant.

⚠ ***CAUTION***
If the coolant in the cooling system contains anti-freeze or anti-corrosive, add a solution of the same concentration as the solution initially put into the system.

Cautions on use and handling of anti-freeze

1. Use a permanent type anti-freeze.
2. When anti-freeze is to be applied or when anti-freeze is to be replaced by coolant with anti-freeze to comply with the rise in the atmospheric temperature, wash and clean the cooling system.
3. The anti-freeze/water mixing ratio depends on the lowest temperature expected. Fill anti-freeze as per the instruction Manual.

LUBRICANT

The high-speed diesel engines, which are often operated in severer conditions than the gasoline engines, require the use of higher quality engine oil. Use the oil and grease conforming to the specification shown below.

Oil and grease		Specifications
Engine oil	Under normal operating conditions	API CC or higher
	Under severe operating conditions for engine with turbocharger	API CD or higher
Gear oil		APIGL-3 or API GL-4
Brake fluid		SAE J1703
Multipurpose type grease		NLGL 1 NO.1
Clutch shifter grease		MIL-G-3545B

TABLE OF RECOMMENDED BRAND OF LUBRICANT

CATEGORY	SPECIFICATION	IDEMITSU	GULE	CALTEX	SHELL	MOBIL KOREA
ENGINE OIL	API CC CD	SINGLE-GRADE APOLLOIL DIESEL MOTIVE S-300 SUMMER : 30 WINTER : 20W/20 MULTI-GRADE APOLLOIL CUSTOM WIDE 15W/40	SINGLE-GRADE SUPER DUTY MOTOR OIL SUMMER : 30 WINTER : 20W/20 MULTI-GRADE SUPER DUTY MOTOR OIL 15W/40	SINGLE-GRADE RPM DELO 300 SUMMER : 30 WINTER : 20W/20 MULTI-GRADE RPM DELO 400 15W/40	SINGLE-GRADE RIMULA X SUMMER : 30 WINTER : 20W/20 MULTI-GRADE RIMULA X OIL 15W/40	SINGLE-GRADE MOBIL DELVAC SUMMER : 30 WINTER : 20W/20 MULTI-GRADE MOBIL DELVAC SUPER 15W/40
ANTIFREEZE FLUID	SAEJ814B	APOLLO RADIATOR COOLANT	YUKONG SUPERA COOLANT	HO YU AF COOLANT	GLYCOSHELL PLUS	-
BATTERY TERMINAL	MS S65-1	-	RETROLA TUMREDVET	RUST PROOF COMPOUND	-	MOBIL ARMA 789

INSTRUCTIONS FOR A LONG PERIOD OF STORAGE

When the engine is to be removed from service for a certain period, proceed as described below and store the engine in a dry place.

ENGINE STORED AS COMPLETED UNIT READY FOR OPERATION

Run the engine once a week for warm-up to circulate engine oil throughout the engine. Prior to firing operation, race the engine with the starter and check the oil pressure gauge to confirm that the oil pressure rises.
During warm-up operation, maintain the engine speed as low as possible.
Accelerate the engine after the coolant has been properly heated.

STORAGE PORCEDURES FOR ENGINE TO BE SHUT DOWN FOR A LONG PERIOD

When the engine is to be removed from service for a definite period, take the steps described below according to the storage period and place a cover over the entire engine when stored.

Desciption	Storage period			
	One month or less	One to three months	three to six months	Six monts to a year
Inside of engine	-	-	- Intake system - Cooling system	- Intake system - Cooling system - Lubricating system - Fuel system
Outside of engine	-	- External exposed portion - Machined surfaces - Aluminium parts - Plated parts	←	←
Accessories	- Air cleaner - Alternator, Glow plug etc. - Belt - Battery	←	←	←

⚠ ***CAUTION***

- ***When the initially expected storage period is exceeded, take proper steps according the extended storage period.***
- ***When the storage period exceeds a year, repeat the same steps.***

Inside of engine

1. Intake system
   Remove the air cleaner and crank engine three times at intervals of approx. 30 seconds by the starter without injection of fuel.
2. Cooling system
   After draining the cooling system, remove the thermostat and blow air into the coolant inlet and outlet to remove the remaining water as much as possible.
3. Lubricating system
   Remove the lubricant from the oil pan, oil filter, injection pump cam housing and governor housing, fill with antirust oil MIL-L-21260, and run the engine at 800 to 1000rpm at no load for 10 minutes. Use the antirust fuel described in paragraph (4) for operation. After operation, remove the antirust oil.
4. Fuel system
   Prior to above-mentioned operation, replace the fuel with an antirust fuel(consisting of 50% gas oil and 50% antirust oil MIL-L-644B) and distribute the antirust fuel throughout the fuel lines. After operation, remove the antirust fuel.

Outside of engine

Touch up unpainted portions and apply a thin coat of antirust oil MIL-L-21260 to the machined surfaces, aluminum parts and plated parts. Seal off open ports with a paper tape.

Accessories of engine

1. After cleaning air cleaner, spray antirust oil MIL-L-644B and seal off open ports with a water proof tape.
2. Clean the inside of alternator, starter with dry compressed air and cover them with a polyethylene sheet or polyethylene coated paper.

⚠ ***CAUTION***

- ***Do not use a vinyl sheet.***
- ***Loosen the belt tension.***
- ***Add distilled water until the electrolyte level of the battery comes up higher than normal.***
- ***Charg e the battery fully, clean the terminals, and store the battery in a cool and dry place. Recharge the battery once a month.***

PRECAUTIONS ON REUSE

An engine warmed-up once a week during the storage period presents no problem but an engine stored for a long period (more than three months) without warm-up operation must be checked and adjusted as described below before reuse.

1. Apply oil to the liner surface and piston top and manually turn the engine several times.
2. Remove antirust oil from the oil pan, oil filter, injection pump cam housing and governor housing, and pour in the specified engine oil up to the specified level.
   Apply fuel and coolant, too, and bleed the fuel system.
3. Before trial operation, remove the rocker cover, apply oil unsparingly to the rocker arm bearing and push rod (check for incorrect valve clearance), race the engine three times with the starter, for about 15 seconds at a time, and confirm the oil pressure of the engine. After starting the engine, allow a sufficient period for warm-up to have smooth running of the parts before placing load on the engine.
4. During trial operation, check for water and gas leaks due to deteriorate gaskets.

INSPECTION AND MAINTENANCE

To prolong the life of the engine and maintain top operating condition at all times, it is important that the engine is checked and serviced at regular intervals.

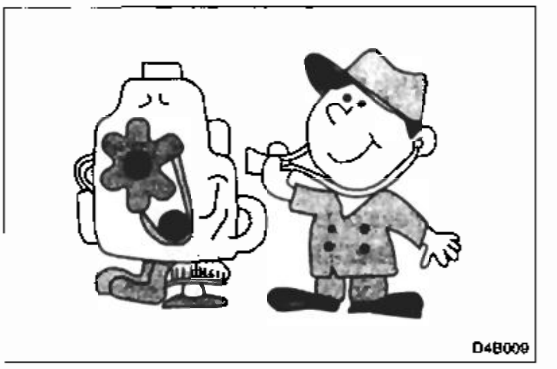

PERIODIC INSPECTION AND MAINTENANCE

1. The simple inspection and maintenance procedures are summarized below. Have detailed checks and adjustments performed at your nearest authorized service shop according to the PERIODIC CHECK AND SERVICE CHART shown on the subsequent pages.
   An emergency engine should also be inspected and maintained according to the maintenance standard table described later.
2. Determine the inspection and maintenance intervals by checking the service meter reading.When the engine is operated under poor or severe conditions, perform inspection and maintenance earlier.

CAUTION
After maintenance operations, be sure to check that no waste cloth or tool is left behind on or around the engine.

SAFETY PRECAUTIONS

WARNING

- ***Do not attempt any type of maintenance operations while the engine is running.***
- ***Wear safety shoes and goggles as necessary, and wear clothes suitable for operations. Use the right tools for the operations.***
- ***Before inspectiong the electrical system, set the battery switch to OFF.***
- ***When parts are cleaned in an inflammable oil, use care to keep out fire.***

INTAKE AND EXHAUST SYSTEM

CHECKING ENGINE EXHAUST EMISSIONS

After the engine has fully warmed up, check the color of exhaust gas

- Colorless or faint blue : Good
- Black : Bad, showing incomplete combustion.
- White : Bad, showing combustion of oil forced up.

Please note that the exhaust gas which is really colorless or faint blue will look white due to the coldness of winter.

AIR CLEANER

A dirty air cleaner element, if left as it is, will decrease engine output at worst. It will also cause increased fuel consumption, increase in harmful contents of exhaust emissions and black smoke.

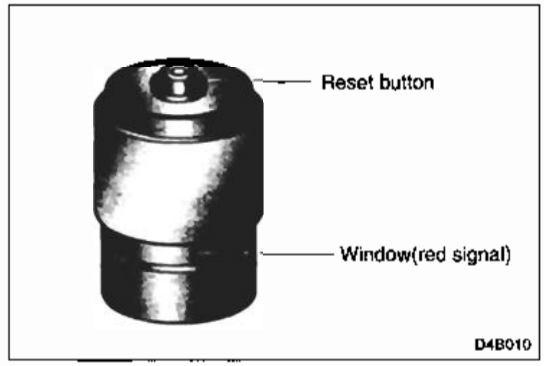

Dust indicator

On an air cleaner with a dust indicator, the time to clean is indicated by a red signal when the element is clogged. When the transparent portion of the indicator turns red. Clean or replace the element regardless of the check intervals. When the element has been cleaned or replaced, depress the reset button at the top.

Cyclone type

1. Remove the bottom cap and withdraw the element straight.
2. Prior to installation, clean the inside of the case and bottom cap and then slowly insert the element straight.
   If the air cleaner is placed in a horizontal position, install the bottom cap so that the assembling direction indicating mark of the lead valve will be faced upward.

   ⚠ ***CAUTION***
   Make sure that the element and bottom cap are securely installed. If it is loosely installed, dust will be drawn in and the air cleaner will fail to function properly.

Clean element

Every 250 hours or when red signal appears in indicator.

⚠ ***CAUTION***
When the engine is operated in dusty place, shorten the cleaning intervals properly. Clean the element by either of the following methods, depending on the degree of contamination.

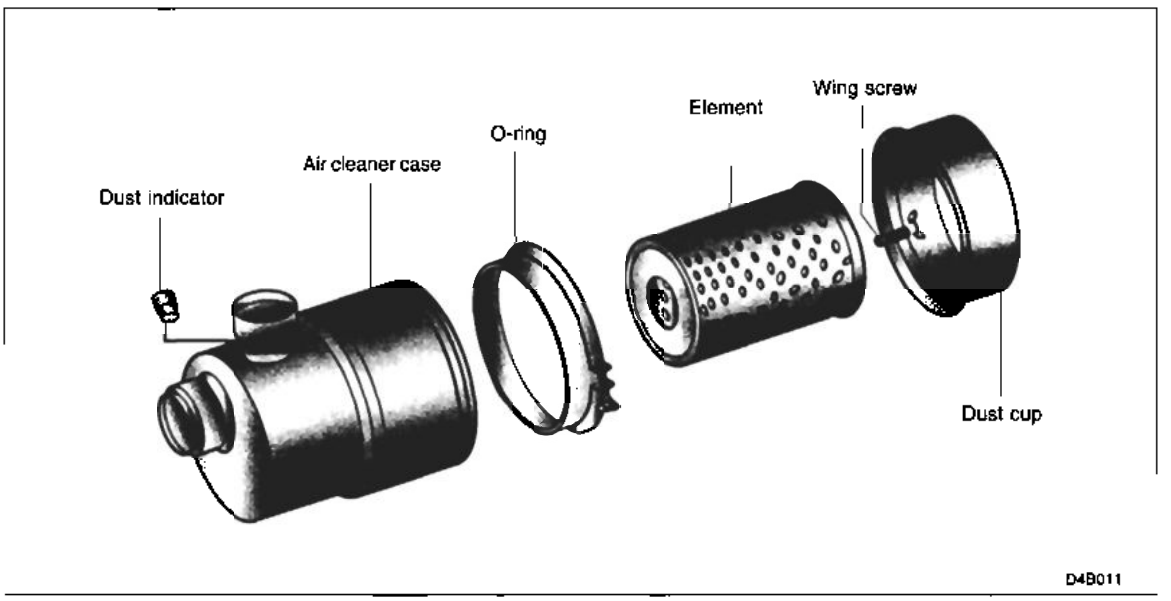

1. If the element is contaminated with dry dust, clean dust, etc. by blowing clean compressed air[685kPa(7kgf/cm²) or less] along the frills from inside the element.

   ⚠ ***CAUTION***
   Do not strike the element, strike it against an object or allow it to fall.

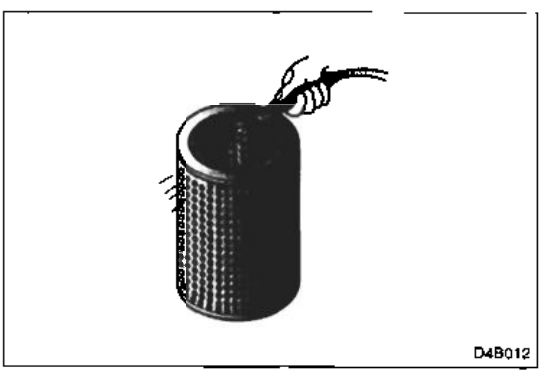

2. If black contamination due to oil smoke, soot or grease and oil is evident (a cyclone type), use an element cleaner to clean the element.
   1) Immerse the element in the aqueous solution of cleaner for approximately 30 minutes and shake the element until it is thoroughly cleaned.
   2) For higher cleaning efficiency, use water heated to approximately 40°C.
   3) Then, take out the element and rinse it in clean water to wash out stains and cleaner. [water pressure not to exceed 270kPa(2.8kgf/cm²)].
   4) Let it dry in a well-ventilated place. If it must be dried in haste, use an electric fan.

D4B013

⚠ ***CAUTION***
- ***Dry the element well. Do not use a moist element.***
- ***Since natural drying require a long time, recommendation is to have a spare element ready.***

3. Put an electric lamp in the cleaned element to check for damage. If pin holes or thin areas have been discovered or if the packing is broken, replace the element with a new one.

D4B014

4. When the element is cleaned, remove the baffle and clean the dust cup, too.
   To remove the baffle, loosen the wing nut.

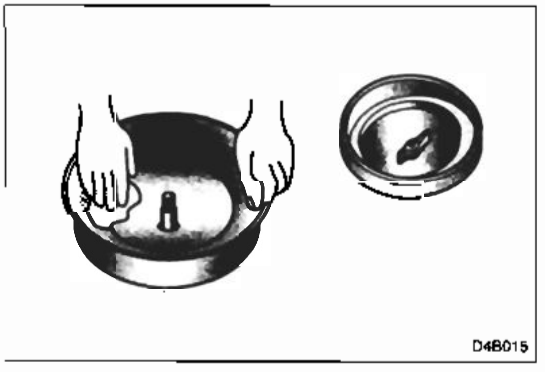
D4B015

LUBRICATING SYSTEM

ENGINE OIL PAN

Replace engine oil

After the first 60 hours and every 250 hours thereafter. (Every 300 hours for the bus air con engine)
On a new engine, be sure to replace the oil after the first 60 hours of operation.

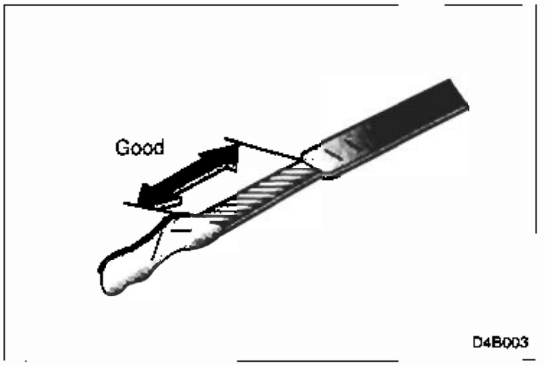

1. After shutdown of the engine, remove the drain plug of the oil pan to remove the oil while it is still hot. At the same time, the oil in the oil filter should also be removed.
2. Install the drain plug and pour in fresh engine oil [API CC or API CD] from the oil filler port up to the FULL mark on the level gauge.
3. After running the engine at idle for several minutes, check the oil level.

Oil quantity

Oil pan : 4.2*l*
Oil filter : 0.7*l*
Oil cooler : Approx. 0.5*l*

⚠ ***CAUTION***

- ***A baby contaminated or deteriorated oil should be replaced regardless of the replacement intervals.***
- ***Replace the oil filter element replacement of oil.***

OIL FILTER

The oil filter in use is pull-flow and by pass type.

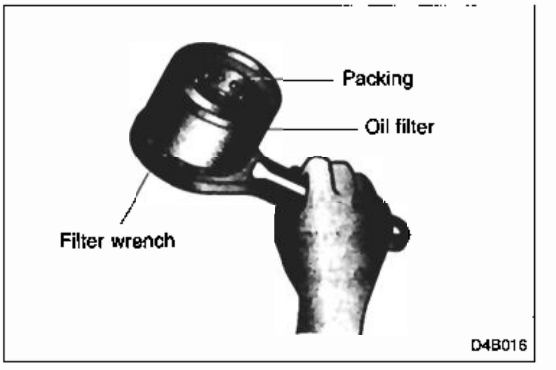

Replace element

- Every 500 hours : EXCAVATOR, S/LOADER
- Every 600 hours : BUS A/CON

⚠ ***CAUTION***

- ***If the oil filter alarm lamp is ON, replace the element immediately regardless of the replacement intervals.***
- ***The element cannot be washed and reused.***

1. Remove the oil filter by turning it counter clockwise(If hard, use a filter wrench).
2. To install the filter, apply a thin coat of engine oil around the packing.
3. If the element only has been replaced without replacing the engine oil, replenish approximately 2.3 lit, of engine oil and check the oil level.
4. After installation, thoroughly wipe away spilt oil, start the engine, and check for oil leaks from the packing.

⚠ ***CAUTION***

If a spilt oil on the engine is left as it is, there is danger of a fire. Make sure that the spilt oil is thoroughly wiped away.

FUEL SYSTEM

BLEEDING OF FUEL SYSTEM

The fuel system should be bled to remove air described below if the fuel supply is exhausted during driving, when the fuel filter is replaced, or if the engine is not used for a long time.

1. Loosen the air plug at the top of the fuel filter.

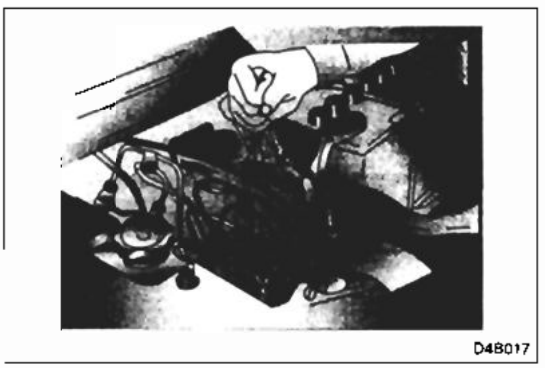
D4B017

2. Pump the hand pump until there are no more bubbles in the fuel coming out of the air plug. When doing this, place a cloth around the air plug to prevent the escaping fuel from spewing about.

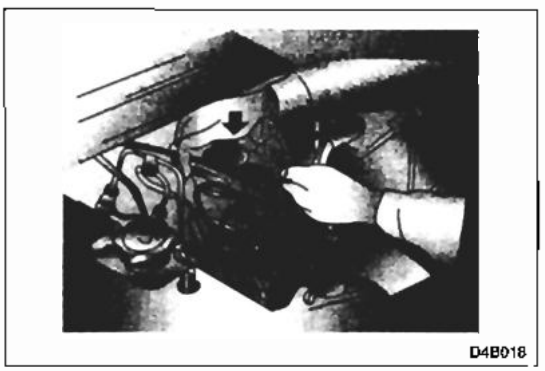
D4B018

3. Tighten the air plug when there are no more bubbles in the fuel.
4. Continue pumping until the hand pump becomes stiff.
5. Finally, check to be sure that there is no leakage of fuel.
   If in doubt, consult your nearest authorized HYUNDAI dealer.

WARNING

- ***Do not smoke or have any other open flame near the Engine while bleeding the fuel system.***
- ***Be sure to carefully clean away any fuel which spilled onto nearby parts coming out of the air plug, because such accumulations of fuel might ignite and cause a fire.***

REMOVAL OF WATER FROM THE FUEL FILTER

If the warning lamp illuminates during driving, it indicates that water has accumulated in the fuel filter. If this occurs, remove the water as described below.

1. Loosen the drain plug at the bottom of the fuel filter.
2. Operate the hand pump slowly 6 or 7 times in order to force the water out through the drain plug.
3. Tighten the drain plug when water no longer comes out.
4. Loosen the air plug and bleed the air. (Refer to "Bleeding the fuel system".)
5. Check to be sure that the warning lamp illuminates when the ignition key is turned to "ON", and that it goes off when the engine is started.
   If in doubt, consult your nearest authorized HYUNDAI dealer.

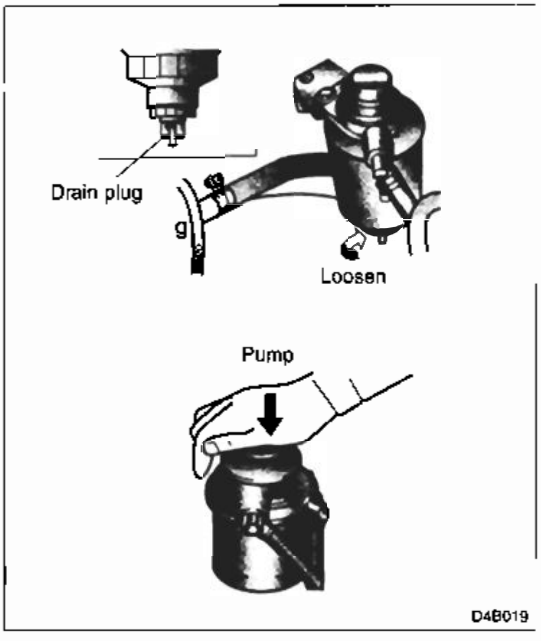

WARNING

- ***Do not smoke or have any other open flame near the engine while bleeding the fuel system.***
- ***Be sure to carefully wipe away any water drained out in this manner, because the fuel mixed in the water might be ignited and result in a fire.***

COOLING SYSTEM

COOLANT

Replace coolant and clean system Every 500 hours

Scale and rust are engine water jacket in the course of time. Clean the radiator and water jacket to remove scale and rust as they cause reduction of the cooling efficiency. Also make sure that the system is cleaned if the coolant contains anti-rust or anti-freeze. When cleaning the system, heat the coolant to 90°C or higher and keep the engine idling.

If the water temperature is lower, the thermostat is closed to shut off flow of the coolant to the radiator, making it impossible to clean the system thoroughly.

1. Open the radiator cap and open the drain cocks of the engine crankcase and radiator to remove the coolant.
2. Close the drain cocks and pour in coolant. Run the engine until the coolant is heated to about 80°C.
3. If there is considerable scale or rust, pour in a cleaning solution and run the engine until the solution is heated to about 90°C.
4. Continue to idle the engine for about 30 minutes.
5. After stopping the engine, open the drain cocks of the engine crankcase and radiator to drain off the coolant completely.
6. Close the drain cocks and pour in coolant to rinse the system thoroughly. Rinse until dirty water no longer runs out.
7. Use soft water as the coolant and fill until it flows out from the overflow pipe.
8. After filling the coolant, run the engine for a while. After stopping the engine, check the coolant level and replenish if necessary. This rechecking of the coolant level is necessary because the coolant level will fall after initial operation as a result of air from the system.

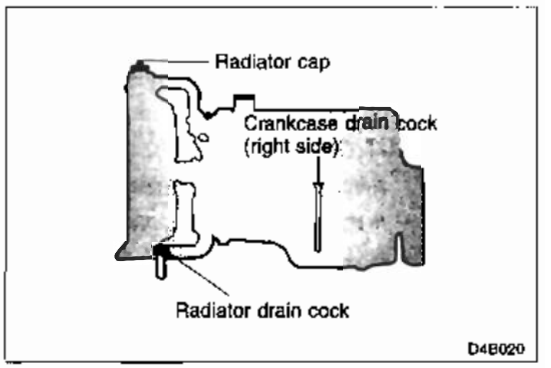

⚠ ***CAUTION***

- ***Use soft water, use of well water or river water may cause scaling or rusting.***
- ***Add anti-corrosive to water in hot season to prevent corrosion and add antifreeze in cold season to prevent freezing of the coolant.***

ADJUSTMENT OF V-BELT

If the V-belt is loose, adjust by the following procedures.

⚠ ***CAUTION***

- ***After adjustment, firmly tighten the bolts and nuts. If the V-belt is too tight, damage to the V-belt and bearing will result.***
- ***Keep the V-belts free from oil and grease.***
- ***When the pair of V-belts need replacing, make sure that both are replaced with ones.***

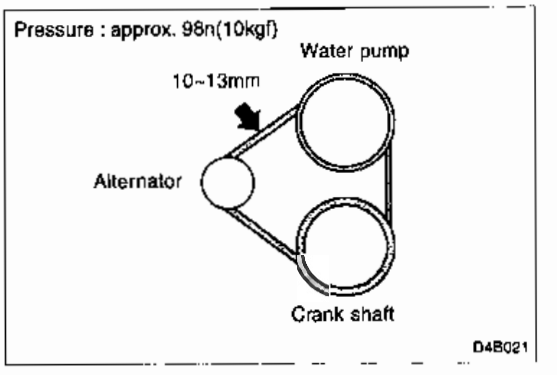

Fan and alternator drive V-belt

Slightly loosen the alternator mounting bolt and adjusting bolt, then move the alternator to right or left.

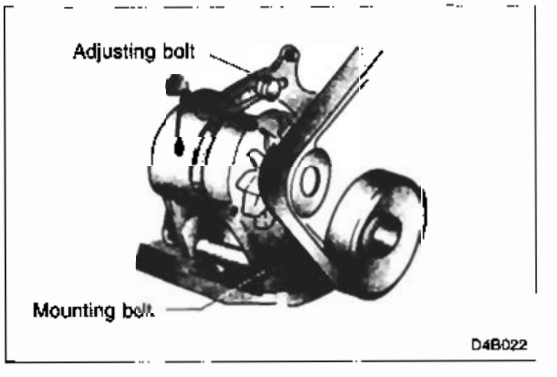

ELECTRICAL SYSTEM

BATTERY

Pay attention to the following when handling the battery.

1. The battery fluid is a dilute sulfuric acid solution. Be careful not to allow the fluid to come in contact with eyes, skin, clothing and metal surface. If the fluid has come in contact with them, wash it out immediately with water.
2. The battery is emitting inflammable hydrogen gas. Avoid using fire near the battery.
3. When the battery is inspected or charged or when the electrical system is serviced, the starter switch should be set to OFF and the negative terminal of the battery disconnected beforehand for safety's sake.
4. When the battery is removed, make sure that the negative terminal is disconnected first. When the battery is installed, the negative terminal should be connected last.

Check for fluid level

Every 125 hours (or every two weeks : every week in summer)

1. The fluid level should be between the "UPPER" and "LOWER" level lines. If the level is below the "LOWER" level line, add fluid or distilled water up to the "LOWER" level line.

   ⚠ ***CAUTION***
   Some batteries have only one level line, which denotes the "LOWER" level.

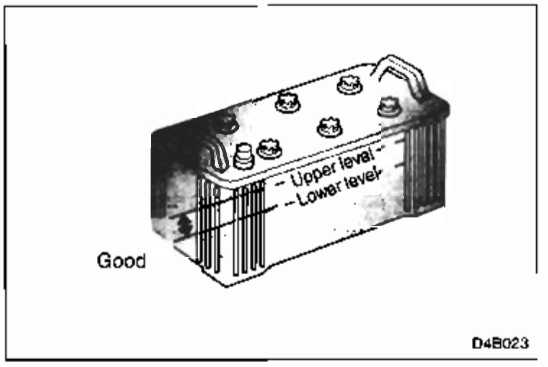

2. As for a battery which has no level lines, the level should be 10 to 15 above the battery plates. Add fluid until the fluid level reaches the lower surface of the case.

   ⚠ ***CAUTION***
   Make sure that fluid is added before charge (before operation). In cold weather, there is danger of freezing.

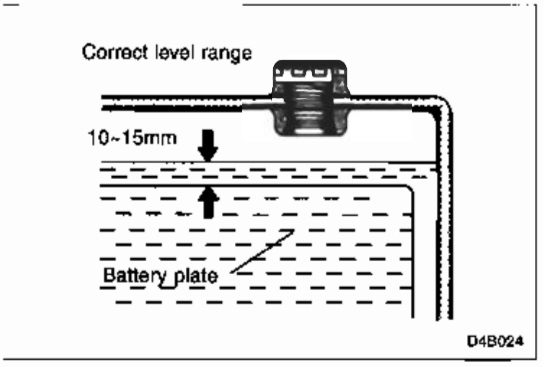

Inspection of battery terminals Every 250 hours

Check the terminals for looseness. If contamination or corrosion is evident, clean.

1. If there is white power on corroded terminals, wash away with warm water.
   Badly corroded terminals should be polished with a sire brush or sandpaper.

   ⚠ ***CAUTION***
   Tighten the vent caps to prevent entry of foreign substances into the battery cell.

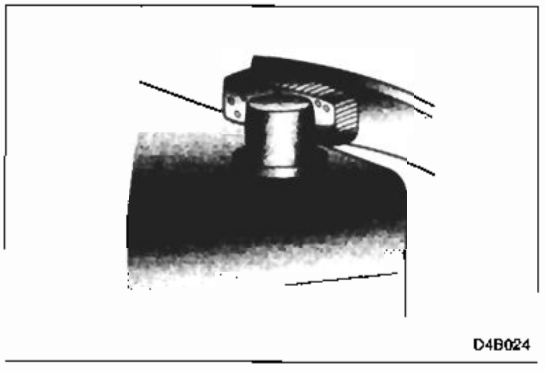

2. After cleaning, apply a very thin coat of grease to the terminals.

WARNING

- *In case of acid contact with skin or eyes, flush immediately with water for a minimum of 15 minutes and get prompt medical attention.*
- *Batteries normally produce explosive gases which can cause personal injury. Therefore, do not allow flames, sparks or lighted substances to come near the battery.*
- *Remember that hydrogen gas in the battery cell is flammable and explosive.*
- *Do not recharge the battery with the battery cable connected.*

CAUTION

Battery efficiency is reducing at cold temperature. Separate and store the battery indoor

5. PERIODIC CHECK

ROUTINE CHECK

Routine checkup is owner's daily inspection of vehicle before operating engine. This is the minimum inspection for safety driving and owner's responsibility. The required inspections are listed below.

Check item

- Have any repairs or vehicle maintenance performed.
- Check engine oil and coolant level.
- Isn't there any water or oil leakage.
- Check driving belt for tension and damage.
- Inspect emission system for gas color and toxic gas emission.
- Check fuel level and normal starting.

PERIODIC CHECK

Engine performance is decreased as time goes by and operation time is increased. Follow the recommended maintenance schedule and owner maintenance checks found in your vehicle scheduled maintenance guide to get a long vehicle's life and avoid sudden breakdown.
Hyundai genuine parts are designed and built to provide the best performance in your vehicle. If your engine requires professional service, your dealership or service center can provide the necessary parts and service with special information and equipments. If your claim is caused by using non-Hyundai genuine parts or servicing at places not recommended, your warranty is not available.

⚠ ***CAUTION***

- ***Improper maintenance may cause your vehicle's damage. Maintenance methods described in this manual are relatively easy to follow. But remember that your claim caused by improper owner's maintenance is not covered with warranty. If you are not understood methods and procedures completely, please ask service to Hyundai dealership or service center.***
- ***Never spray the engine with water; as damage to electric system may occur:***

⊗ ***WARNING***

Be especially careful when inspecting or servicing your vehicle not to cause dangerous accident.

PRECAUTION

1. Park the vehicle on a flat ground.
2. Turn the key to LOCK or ACC.
3. Turn off the engine and remove the key.
4. Work in a well-ventilated area.
5. Disconnect the (-) terminal from the battery before maintenance.

⚠ ***CAUTION***

Be sure that the fuse and main fuse wirings are not down during working in the ignition cable and electric wirings.

⊗ ***WARNING***

- ***To reduce the risk of personal injury, make sure the engine is cool before inspecting the engine.***
- ***Do not work on a vehicle with the engine running in an enclosed space, unless you are sure you have enough ventilation not to be intoxicated with emission gas***
- ***When the engine is running, keep loose clothing, jewelry or long hair away from moving parts.***
- ***Keep all lit cigarettes, open flames and other lit material away from the battery and all fuel related parts.***
- ***Take care when connecting (-) terminal to the battery. Do not misconnect (-) terminal to (+) cable or (+) terminal to (-) cable because it can cause fire.***
- ***Disconnect the (-) terminal from the battery before working in the battery, ignition cable, and wirings because you can receive electric shock.***
- ***Cooling pan can be electrically operated without engine running. Its operation can cause serious injury. Therefore necessarily remove the key except that the engine running is required.***

The following maintenance schedule describes the specific periodical inspections and maintenances.

1. The following schedule is for the engine used regularly.
2. Maintenance and maintenance times are based on service meter instructions. Standard maintenance and maintenance intervals are based on standard driving conditions. If the mileage is more than the normal state, consider it.
3. The following schedule does not contain accessories attached not to the engine.

PERIODIC CHECK AND SERVICE CHART

Symbols ○ : Check, adjust or lubricate
● : Replace oil, grease or element

Check and service item			Preoperational (every 10 hours)	Every 60 hours	Every 125 hours	Every 250 hours	Every 500 hours	Every 1000 hours	Every 7000 hours	Remarks
Engine General	Starting condition and noise			○						
	Low speed and acceleration (rated) condition			○						
	Exhaust condition									
	Cylinder head, manifold and mounting bracket installation			*○				○		* Applicable to new engine only
	Compression pressure							○		
	Valve clearance			*○				○		* Applicable to new engine only
	Timing belt								●	Inspection of 4000hour
Lubrication system	Oil leaks			○						
	Damaged hose							○		
	Engine oil pan	Check oil for contamination and quantity	○							
		Replace oil		*●		● (300H)				* On new engine, be sure to replace. (engine oil)
	Oil filter	Replace					● (600H)			
Fuel system	Fuel leaks (Check hose for damage and detenioration)			○						
	Fuel filter	Replace						●		
	Injection pressure and spray condition of injection nozzle						○			
	Injection tirning							○		
	Check and clean prefilter (gauge filter of stralner)						○			
	Discharge water and sediment from inside fuel tank						○			

* ( ) : Replace bus air con engine

Symbols ○ : Check, adjust or lubricate
● : Replace oil, grease or element

Check and service item			Preoperational (every 10hours)	Every 60 hours	Every 125 hours	Every 250 hours	Every 500 hours	Every 1000 hours	Remarks
Cooling system	Water leaks(check hose damage and deterioation)		○						
	Replace coolant and clean system							○	Be sure to clean system before and after use of antifreeze
	Loose or damaged V-belt		○						
	Damaged fan, mounting condition of fan							○	
	Radiator	Water quantity	○						
		Cap function						○	
		Clogged and damaged core						○	
Electrical system	Battery	Electrolyte quantity				○			Every two weeks, but every week in summer
		Specific gravity of electrolyte					○		
		Connected condition of terminals					○		
	Loose electrical wiring connections and loose or damage insulators					○			

TROUBLESHOOTING

Do your best to find trouble in its earliest possible stage and correct the trouble before it develops into major trouble.
When symptoms not covered in the following tables are evident, when trouble persists even after correction and when troubles (marked with asterisk* in the table), are not readily corrected, please contact nearest services chop for repair, informing of the condition of troubles.

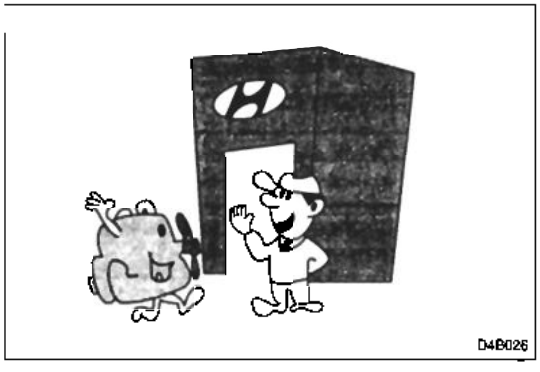

Trouble	Probable cause	Correction
1. Engine does not run when srarter switch is turned on (starter does not turn or turns only slowly)	• Battery switch is turned off	Turn on battery switch
	• Disconnected, loose or corroded battery terminals	
	• Battery capacity insufficient or discharged battery	
	• Earth cable disconnected	Connect securely
	• Engine oil viscosity inadequate	
2. Engine does not run when starter switch is turned on (starter runs but engine does not start)	• Empty fuel	Replenish fuel
	• Clogged fuel filter	
	• Air trapped on fuel system	
	• Defective preheating system	Check and correct
	• Clogged air cleaner	
3. Engine stops when operated at a low speed	• Idling speed too low	Adjust
	• *Incorrect valve clearance	Check and correct
	• Clogged fuel filter	
	• Clogged air cleaner	
4. Insufficient engine output	• Clogged air cleaner or air leaks	
	• Clogged fuel filter	
	• *Incorrect valve clearance	Check and correct
	• *Clutch slipping	Check and correct
5. Black or dark gray exhaust gas	• Clogged air cleaner	
	• *Incorrect valve clearance	Check and correct
6. Excessive fuel consumption	• Fuel leaks	Check and correct
	• Clogged air cleaner	
	• *Clutch slipping	Check and correct
7. Excessive engine oil consumption	• Improper oil	
	• High oil level	Adjust to FULL mark
	• Oil leaks	Check
	• Oil replacement intervals too long	
	• Insufficient warm-up operation	Warm-up until coolant is heated to approx 60℃
8. Oil pressure too low	• Low engine oil level	Replenish to FULL mark
	• Improper engine oil viscosity	
	• Broken pipe or oil leaking from connection	Check oil pan and oil pipe for damage and oil leaks
	• Clogged oil filter	
	• Low coolant level	
	• Clogged radiator front surface	Clean
9. Engine overheating	• Loose or broken V-belt	
	• Rust or scale in coolant	
	• *Defective thermostat	Check and replace
	• Disconnected, loose and corroded battery terminals	
10. Battery runs down frequently	• Low battery fluid level	
	• Loose or broken V-belt	
	• Defective Battery	replace

6. MAIN SPECIFICATIONS

D4BB

ITEM	ENGINE MODEL			
	N/A			
Type	Water-cooled, 4-cycle diesel, SOHC			
No. of cylinders-arrangement	4-In-line			
Bore x stroke	91.1mm x 100mm			
Total displacement	2607cc			
Combustion chamber type	Swirl			
compression ratio	22 : 1			
Firing order	1 - 3 - 4 - 2			
Turning direction	Counter clock wise as viewed from flywheel			
Engine dimensions (mm) (total length x total width x total height)	771.7 x 598 x 648 (Bus air con)	931.6 x 652.2 x 648.0 (Fork lift)	755.4 x 486.0 x 648 (Skid loader)	906.4 x 632 x 823.5 (Generator)
Weight	200kg			
Fuel	Diesel fuel oil (cetane number 45 or more)			
Fuel injection pump	Bosch type VE			
Governor	Variable Speed Control			
Injection nozzle	Hole type			
Lubrication system	Geared pump pressure feel type			
Engine oil	CC or better			
Cooling system	Forced circulation by centrifugal pump			
Starter	12V-2.2KW(Fork lift, Skidloader, Gnerator)		24V-5KW(Bus air con engine)	
Alternator	12V-65A(Fork lift, Skidloader, Gnerator)			

D4BB T/C

ITEM	ENGINE MODEL
	TURBO CHARGER
Type	Water-cooled, 4-cycle diesel
No. of cylinders-arrangement	4-In-line
Bore x stroke	91.1mm x 100mm
Total displacement	2607cc
Combustion chamber type	Swirl
compression ratio	22 : 1
Firing order	1 - 3 - 4 - 2
Turning direction	Counter clock wise as viewed from flywheel
Engine dimensions (mm) (total length x total width x total height)	912 x 648 x 784
Weight	215kg
Fuel	Diesel fuel oil (cetane number 45 or more)
Fuel injection pump	Bosch type VE
Governor	Variable Speed Control
Injection nozzle	Hole type
Lubrication system	Geared pump pressure feel type
Engine oil	CF or better
Cooling system	Fored circulation by centrifugal pump
Starter	12V-2.2KW
Alternator	12V-65A

D4BF

ITEM	ENGINE MODEL
	D4BF
Type	Water-cooled, 4-cycle diesel, SOHC
No. of cylinders-arrangement	4-In-line
Bore x stroke	91.1mm x 95mm
Total displacement	2476cc
Combustion chamber type	Swirl
compression ratio	21 : 1
Firing order	1 - 3 - 4 - 2
Turning direction	Counter clock wise as viewed from flywheel
Engine dimensions (mm) (total length x total width x total height)	717 x 629 x 736
Weight	204.8kg
Fuel	Diesel fuel oil (cetane number 45 or more)
Fuel injection pump	Bosch type VE
Governor	Variable Speed Control
Injection nozzle	Hole type
Lubrication system	Geared pump pressure feel type
Engine oil	CF or better
Cooling system	Fored circulation by centrifugal pump
Starter	12V-2.2KW
Alternator	12V-65A

⚠ ***CAUTION***

1. ***Only standard specifications are shown in the above.***
2. ***The specifications are subject to change without notice.***

SERVICE DATA

Check Item	Value
• **Oil quantity** - Oil pan - Oil filter	 Approx 5.4*l* Approx 4.2*l* Approx 1.2*l*
• **Oil pressure** - At rated speed - At idling speed	 3~5kg/cm² (295~490kPa) 0.8kg/cm² (80kPa) or more
• **Cooling water quantity** - Only engine proper	 Approx 3.9*l*
• **V-belt tension** - Belt diflection when middle of belt is depressed at about 98N(10kgf) of force	 10 ~ 13 mm

SHOP MANUAL

(FOR D4B INDUSTRIAL ENGINE)

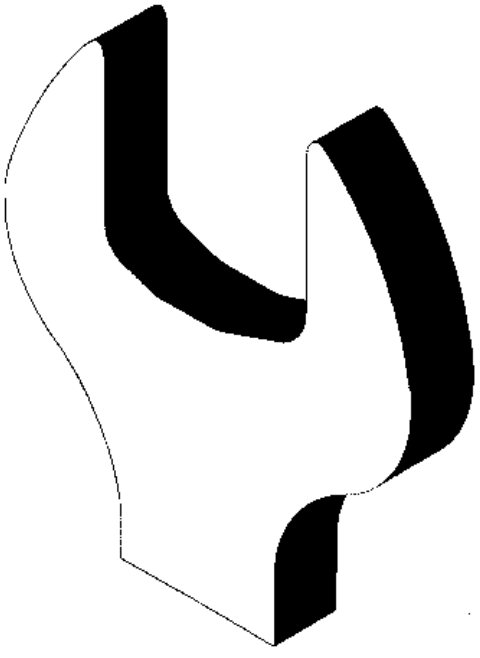

HYUNDAI

MODEL D4B
SHOP MANUAL
(FOR INDUSTRIAL USE)

HYUNDAI

FORWORD

We would like to express our sincere gratitude to the patrons who have given us unwavering encouragement. This manual covers shop manual and parts catalog in one volume for an easy reference of parts list, as well as contains the accurate and efficient service procedures for HYUNDAI D4B industrial engine.

This manual includes specifications, troubleshooting, removal, installation, disassembly and assembly in each group and presents component illustrations and descriptions for an easy reference.

Accordingly, thoroughly read this manual, rapidly purchase the required parts and service the engine in proper methods to extend its life and benefit.

Improper service methods and procedures may shorten the engine life resulting from its low performance. Hyundai genuine parts are designed and built to provide the best performance in your engine. If your claim is caused by using non-Hyundai genuine parts or servicing at places not recommended, your warranty is not available.

Hyundai Motor Co., Inc. makes efforts to enhance quality and build better parts and service data for you. We want to assist you in every way possible with this manual and your purchase of HYUNDAI engine is highly appreciated.

March 2004

Hyundai Motor Co., Inc.
Industrial Engine Development Team
(TEL 82-52-280-8221~8223)

O.E.M Parts Export Team
(TEL 82-2-746-0291~0299)

NOTE: Contents and specifications are subject to change according to design changes without notice.

IMPORTANT SAFETY NOTICE

Appropriate service methods and proper repair procedures are essential for the safe, reliable operation of all engines as well as the personal safety during work. This manual provides general directions for the efficient service methods and procedures.

There are numerous variations in procedure, techniques, tools and parts for servicing engines, as well as in the skill of the individual technician.
This manual cannot possibly anticipate all such variations and provide advice or cautions as to each.
Accordingly, anyone who departs from the instructions provided in this manual must establish that he comprises neither his personal safety nor the vehicle integrity by his choice of methods, tools or parts.

NOTE, CAUTION, WARNING

NOTE : Information needed in reference to a repair service.

CAUTION: Information about an activity that could cause damage to the vehicle.

WARNING : Information about an activity that could cause injury or damage to the driver, occupants or repairman.

[SAFETY INFORMATION]

The following list contains some general warnings that you should follow when you work on an engine.

- Always wear safety glasses for eye protection.
- Be sure that the ignition switch is always in the OFF position, unless otherwise required by the procedure.
- Operate the engine only in a well-ventilated area to avoid the danger carbon monoxide poisoning.
- Keep yourself and your clothing away from moving parts when the engine is running, especially the drive belt.
- To prevent serious burns, avoid contact with hot metal parts such as the radiator, exhaust manifold, tail pipe, catalytic converter and muffler.
- Do not smoke while working on an engine.
- To avoid injury, always remove rings, watches, loose hanging jewelry and loose clothing before beginning to work on an engine.
- Keep hands and other objects clear of the radiator fan.
  The fan can be operated with the ignition key in the OFF position. Therefore necessarily disconnect the radiator fan motor connector.

CONTENTS

1.	GENERAL	1-1
2.	ENGINE MECHANICAL SYSTEM	2-1
3.	LUBRICATION SYSTEM	3-1
4.	COOLING SYSTEM	4-1
5.	INTAKE AND EXHAUST SYSTEM	5-1
6.	ENGINE ELECTRICAL SYSTEM	6-1
7.	FUEL SYSTEM	7-1

CHAPTER 1 GENERAL INFORMATION

1. GENERAL 1-1

2. ENGINE IDENTIFICATION NUMBER 1-6

3. TIGHTENING TORQUE OF STANDARD PARTS 1-7

4. RECOMMENDED LUBRICANTS AND CAPACITIES 1-8

5. SPECIFICATIONS 1-9

6. TORQUE SPECIFICATIONS 1-13

7. SPECIAL TOOLS 1-15

8. TROUBLESHOOTING 1-18

9. CHECKING POINT 1-20

1. OVERALL

1) ENGINE

Cylinder head is made of aluminum alloy and combustion chamber is a swirl type.
Valve is a SOHC type and the camshaft is operated by the Cog type timing belt.
Cylinder block is made of special cast iron and dry cylinder liner is press-fitted in the cylinder. Water jacket is a Siamese type and piston is made of aluminum alloy and connected with connecting rod by full floating piston pin.
Oil ring no.1 of the piston ring is made of steel, no.2 of special cast iron, piston ring no.1 of barrel face, no.2 of taper face and oil ring of bevel cutter and coil expander is attached.

ENGINE ASSEMBLY

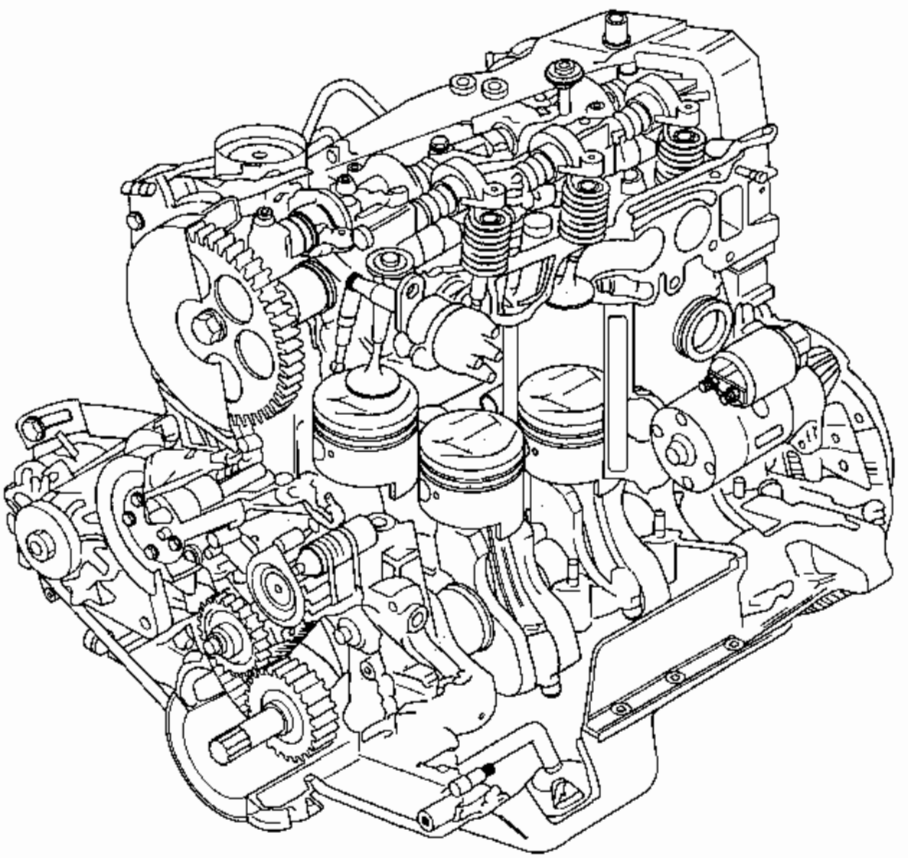

KD4BB01A

Crankshaft is made of forged steel and supported with main bearing. Pulley attached with torsional damper is installed in the front of crankshaft and flywheel in the rear of it. Silent shaft is installed to both ends of the cylinder block, operated with cog belt and rotated at a double speed of crankshaft.

Timming belt train

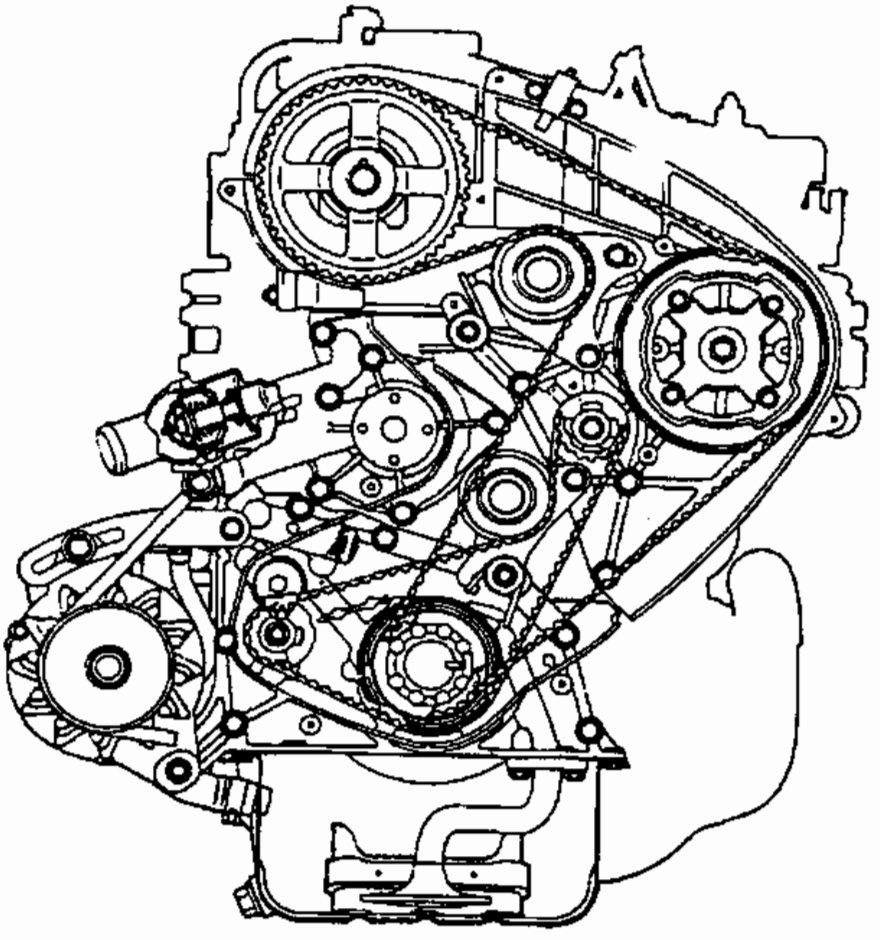

KD4BB02A

2) LUBRICATION SYSTEM

It is a forced lubrication system and the forced oil by the oil pump is sent to the engine compartment through the oil cooler and oil filter as shown in the illustration and directly operated by the crank shaft.
Maximum oil pressure is controlled by the reducing valve.

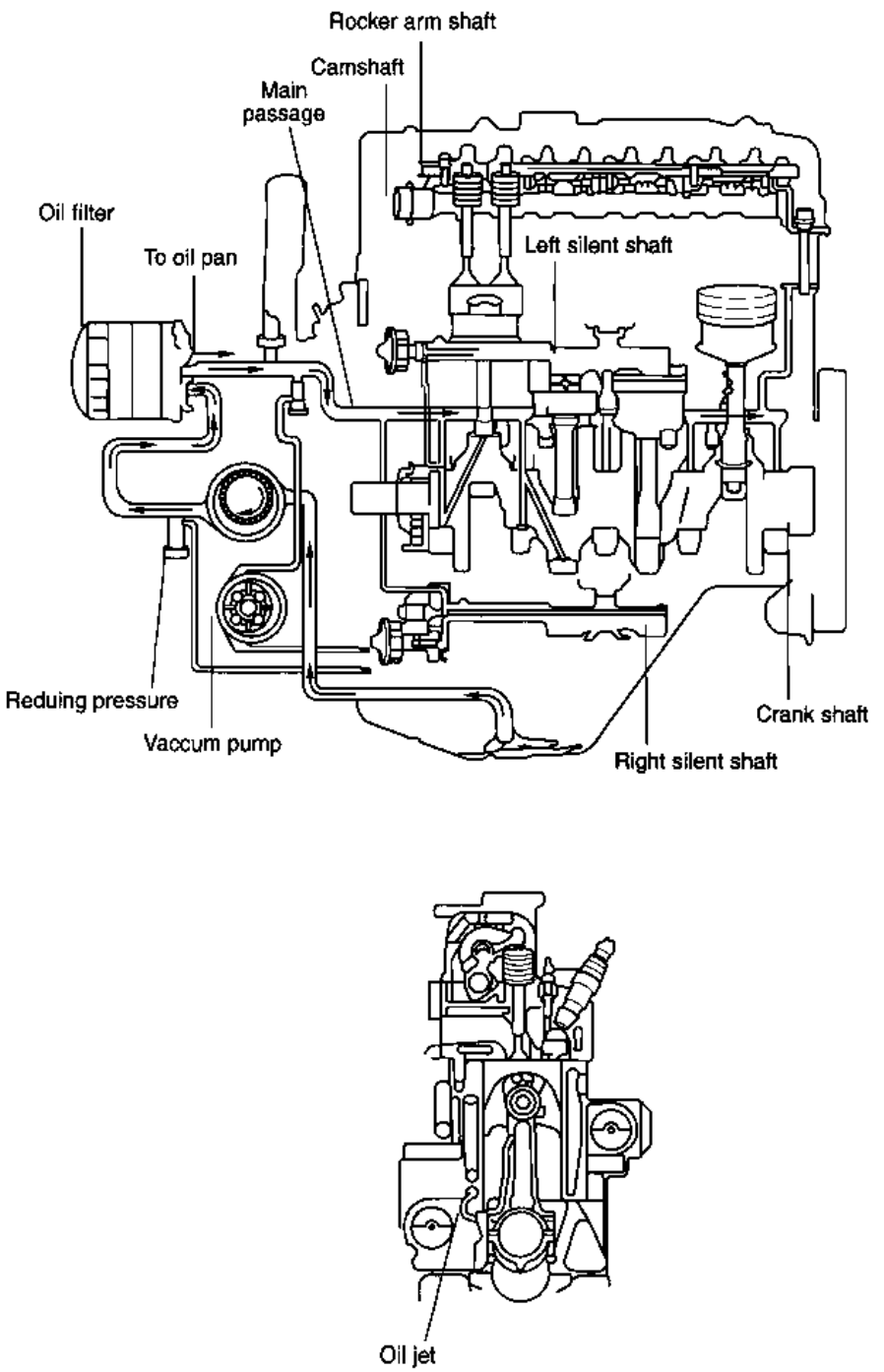

Oil filter is a combined type and full flow filter and bypass filter are built in it. The bypass filter in the full flow filter uses a thick multi-fiber media to filter dirt (soot).
If oil enters the oil filter, filtered oil from the full flow filter passes through the main passage and the filtered oil from the bypass filter returns to the oil pan.

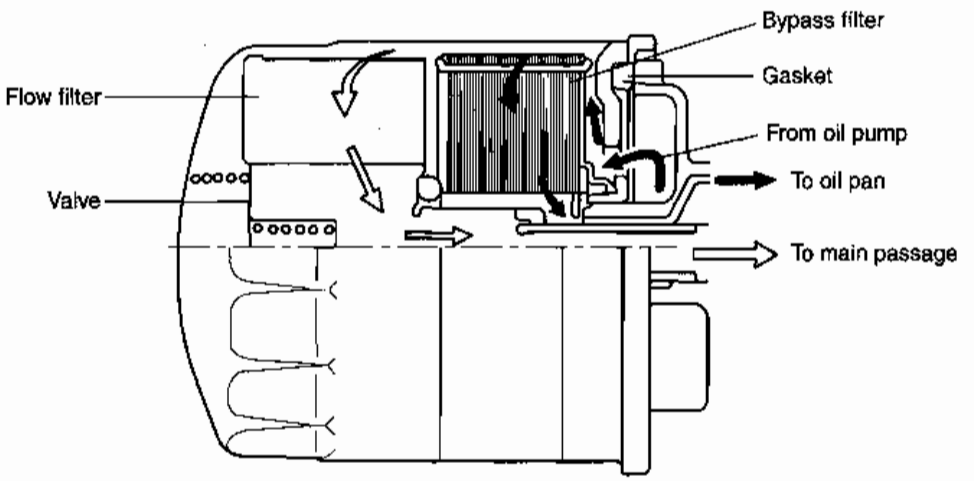

KD4BB04A

3) COOLING SYSTEM

Engine is cooled with the circulated coolant forced by the water pump.
This illustration shows the flow of coolant.

Cold engine

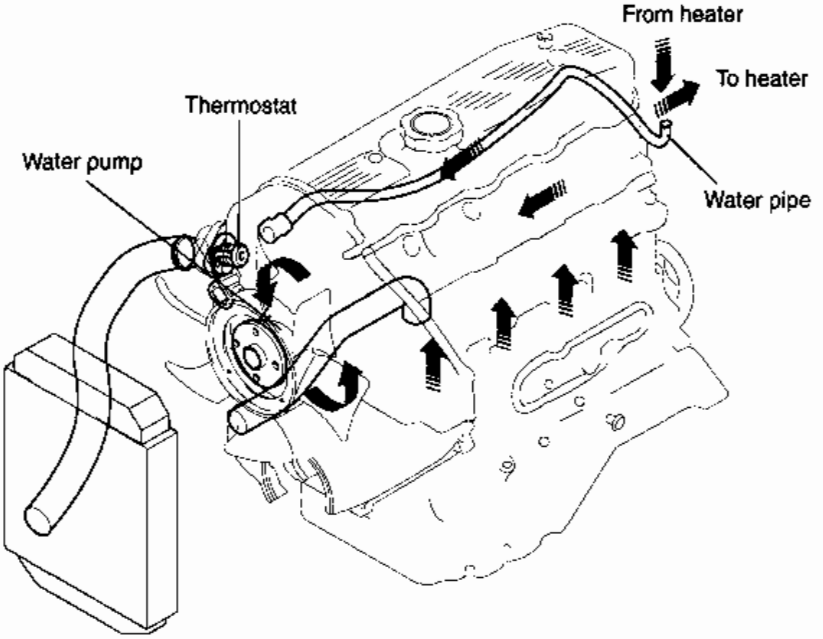

Hot engine

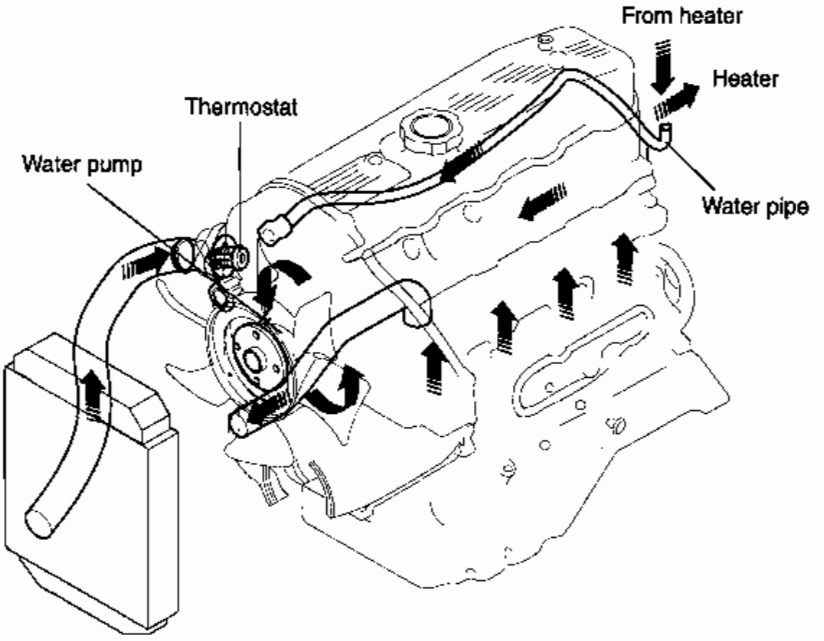

KD4BB05A

2. ENGINE INDENTIFICATION NUMBER

1) ENGINE IDENTIFICATION NUMBER LOCATION

The engine identification number is stamped on the right front side of the top edge of the cylinder block.

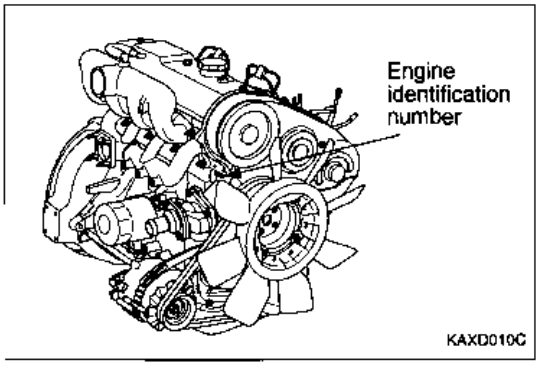

2) DESCRIPTION OF ENGINE IDENTIFICATION NUMBER

D	4	B	B	2	0 0 0 0 0 0
①	②	③	④	⑤	⑥

① Engine fuel
- D : diesel

② Engine range
- 4 : In line 4 cycle 4 cylinder

③ Engine development order
- B : 4D56

④ Engine capacity
- F : 2476 cc TC
- H : 2476 cc TCI
- B : 2607 cc NA

⑤ Production year
- 1 : 2001
- 2 : 2002
- 3 : 2003
- 4 : 2004

⑥ Engine production sequence number
- 000000 ~ 999999

3. TIGHTENING TORQUE TABLE OF STANDARD PARTS

Bolt nominal diameter (mm)	Pitch (mm)	Torque (kg · m)	
		Head Mark 4	Head Mark 7
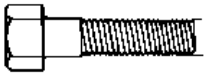 EADA010R	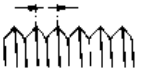 EADA010S	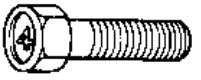 EADA010T	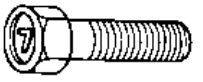 EADA010U
M5	0.8	0.3 ~ 0.4	0.5 ~ 0.6
M6	1.0	0.5 ~ 0.6	0.9 ~ 1.1
M8	1.25	1.2 ~ 1.5	2.0 ~ 2.5
M10	1.25	2.5 ~ 3.0	4.0 ~ 5.0
M12	1.25	3.5 ~ 4.5	6 ~ 8
M14	1.5	7.5 ~ 8.5	12 ~ 14

NOTE

1. ***The torques shown in the table are standard values under the following conditions.***
   - ***Nuts and bolts are made of steel bar, and galvanized.***
   - ***Galvanized plain steel washers are inserted.***
   - ***All nuts, bolts and plain washers are dry.***
2. ***The torques shown in the table are not applicable.***
   - ***When spring washers, toothed washers and the like are inserted.***
   - ***If plastic parts are fastened.***
   - ***If self-tapping screws or self-locking nuts are used.***
3. ***If you reduce the torques in the table to the percentage indicated below, under the following conditions, it will be the standard value.***
   - ***If spring washers are used : 85%***
   - ***If threads and bearing surfaces are stained with oil : 85%***

4. LUBRICANTS CAPACITES

Description		Capacities	Specified oil
Engine oil	Oil pan	0.7 *l*	Above API CD or SG (10W/30 or 1500W/40)
	Oil filter	0.5 *l*	
	Oil cooler	9.5 *l*	
	Total	0.7 *l*	
Coolant			Antifreeze for aluminum

⚠ ***CAUTION***

For the best performance and maximum protection of all types of operation, select only those lubricants which :

1. ***Satisfy the requirements of the API classification.***
2. ***Have the proper SAE grade number for expected ambient temperature range.Lubricants which do not have both an SAE grade number and an API service clasification on the container should not be used.***

5. SPECIFICATIONS

Description			Specification		Limit
General	Type		Diesel engine		
	Number of cylinders		4		
	Valve system		OHC		
	Total displacement		D4BB	D4BF, D4BH	
			2607cc	2476cc	
	Cylinder bore		91.1 mm	91.1 mm	
	Cylinder stroke		100 mm	95 mm	
	Comprssion ratio		22	21	
	Valve timing	Intake valve - OPEN - CLOSE	20° BTDC 48° ATDC		
		Exhaust valve - OPEN - CLOSE	54° BTDC 22° ATDC		
	Firing order		1 - 3 - 4 - 2		
Cylinder head	Flatness of gasket surface		0.05 mm		0.2 mm
	Flatness of manifold mounting surface		0.15 mm		0.3 mm
	Overall height		94.0 ~ 94.1 mm		
	Oversize of valve guide hole				
	Rework dimensions (both intake and exhaust)	0.05 0.25 0.50	13.050 ~ 13.068 mm 13.250 ~ 13.268 mm 13.500 ~ 13.518 mm		
	Oversize rework dimensions of intake valve seat hole	0.30 0.60	43.300 ~ 43.325 mm 43.600 ~ 43.625 mm		
	Oversize rework dimensions of exhaust valve seat hole	0.30 0.60	37.300 ~ 37.325 mm 37.600 ~ 37.625 mm		
Camshaft	Cam height	Intake Exhaust	37.05 mm 37.05 mm		36.55 mm 36.55 mm
	Journal O.D.		29.935 ~ 29.950 mm		
	Oil clearance		0.05 ~ 0.08 mm		
	End play		0.1 ~ 0.2 mm		
Rocker arm	I.D		18.910 ~ 18.928 mm		
	Rocker arm - to -guide clearance		0.012 ~ 0.050 mm		

Description			Specification	Limit
Rocker shaft	O.D.		18.878 ~ 18.898 mm	
	Length		451.5 mm	
Valve	Over length	Intake	136.5 mm	
		Exhaust	136.5 mm	
	Stem diameter	Intake	7.960 ~ 7.975 mm	
		Exhaust	7.930 ~ 7.950 mm	
	Fage angle		45° ~ 45° 3 0 "	
	Thickness of valve head (Margin)	Intake	2 mm	1.0 mm
		Exhaust	2 mm	1.0 mm
	Stem-to-guide clear-ance	Intake	0.03 ~ 0.06 mm	
		Exhaust	0.05 ~ 0.09 mm	
Valve spring	Free height		49.1 mm	
	Load/Installed height	N · kg/mm	276/40.4	
		Out-of squareness	Max 2°	
Valve guide	Over length	Intake	71 mm	
		Exhaust	74 mm	
	I.D.		8.000 ~ 8.018 mm	
	O.D.		13.06 ~ 13.07 mm	
	Press temperature		Ordinary temperature	
Valve seat	Seat angle		45°	
	Valve contack widht		0.9 ~ 1.3 mm	
	Sinkage			0.2
Silient shaft	Journal diameter	Right - Front - Rear	 18.300 ~ 18.467 mm 42.975 ~ 42.991 mm	
		Left - Front - Rear	 18.959 ~ 18.980 mm 49.975 ~ 42.991 mm	
	Oil clearance	Front Rear	0.02 ~ 0.06 mm 0.05 ~ 0.09 mm	

Description			Specification		Limit
Piston	O.D.		79.0 ~ 79.2 mm		
			TC	NA	
	Piston-to cylinder clearance		0.04 ~ 0.06	0.03 ~ 0.05	
	Ring groove width	No. 1 ring	2.601 ~ 2.603	2.02 ~ 2.04	
		No. 2 ring	2.100 ~ 2.102	2.07 ~ 2.09	
		Oil ring	4.010 ~ 4.035	3.01 ~ 3.035	
Piston ring	End gap	No. 1 ring	0.35 ~ 0.50	0.25 ~ 0.40	0.8 mm
		No. 2 ring	0.41 ~ 0.54	0.45 ~ 0.60	0.8 mm
		Oil ring	0.25 ~ 0.45	0.20 ~ 0.40	0.8 mm
	Ring-to-ring groove clearance	No. 1 ring	0.056 ~ 0.076	0.03 ~ 0.07	0.15 mm
		No. 2 ring	0.046 ~ 0.066	0.08 ~ 0.12	0.15 mm
		Oil ring	0.02 ~ 0.065	0.02 ~ 0.065	0.1 mm
Piston pin	O. D.		28.994 ~ 29.000 mm		
Connecting rod	Big end center-to small end center length bend		157.95 ~ 158.05 mm		
	Bend		0.05		
	Twist		0.1		
	Bing end side clearance		0.1 ~ 0.25 mm		
Crank shaft	End play		0.05 ~ 0.18 mm		0.2 mm
	Journal O.D.		66 mm		0.3 mm
	Pin O.D.		53 mm		
	Out of roundness of journal and pin		0.05 mm less than		
	Out-of taper of journal and pin		0.015 mm less than		
	Oil clelarance of journal		0.02 ~ 0.05 mm		0.1 mm
	Oil clearance of pin		0.02 ~ 0.05 mm		
	Journal	0.25 U.S.	65.735 ~ 65.750 mm		
		0.50 U.S.	65.485 ~ 65.500 mm		
		0.75 U.S.	65.235 ~ 65.250 mm		
	Pin	0.25 U.S.	52.735 ~ 52.750 mm		
		0.50 U.S.	52.485 ~ 52.500 mm		
		0.75 U.S.	52.235 ~ 52.250 mm		

Description			Specification	Limit
Cylinder block	O. D.		91.10 ~ 91.13 mm	
	Flatness of gasket surface		0.05 mm	0.1 mm
	Overall height		318.45 ~ 318.55 mm	
Flywheel	Run out		0.13 mm	0.13 mm
Oil pump	Tip clearnace	Inner gear	0.22 ~ 0.35 mm	0.5 mm
		Outer gear	0.12 ~ 0.22 mm	0.4 mm
	Body clearnace	Side clearance	0.04 ~ 0.10 mm	0.15 mm
	Side clearance	Inner gear	0.03 ~ 0.09 mm	0.15 mm
		Outer gear	0.12 ~ 0.22 mm	0.30 mm
Cooling system	Cooling system		Water-cooled forced circulation system	
	Drive Belt		V Belt	
	Water pump type		Centrifugal impeller	
	Fan clutch type		Bimetal thermostat type	
	Thermo type		Wax type	
	Coolant temperature gauge unit		Thermister type	
	Thermo switch(113°C, A/con)		Thermister type	
	Drive belt		10 ~ 13 mm	
	Thermostat	Valve opening temperature	76.5± 2°C / 82± 2°C	
		Fulley opening temperature	95°C	
	Repeat amount		8 or not less than	
	Coolant temperature gauge unit Resistance	Coolant temperature gauge element	90.5 ~ 117.5Ω /70°C	
			21.3 ~ 26.3Ω /115°C	
		Glow control element	22.3 ~ 27.3kΩ /-20°C	
			2.92 ~ 3.58kΩ /20°C	
Intake & Exhaust	Air cleaner		Paper filter type	
	Muffler		Expansion resonance type	

6. TORQUE SPECIFICATIONS

Deseription		Standard (kg · m)
Crankshaft pulley bolt		17 ~ 19
Crankshaft sprocket bolt		6.5 ~ 7.5
Timing belt tensioner bolt		2.2 ~ 3.0
Injection pump sprocket nut		8 ~ 9
Silent shaft sprocket nut		3.4 ~ 4.0
Timing belt tensioner " B " nut		2.2 ~ 3.0
Rocer cover bolt		0.5 ~ 0.7
Rocker arm shft bolt		1.9 ~ 2.1
Cylinder head bolt	Cold engine	10.5 ~ 11.5
	Hot engine	11.5 ~ 12.5
Oil pan bolt		0.6 ~ 0.8
Oil pan drain plug		6 ~ 8
Front case bolt (upper, lower)		1.2 ~ 1.5
Silent shaft driven gear bolt		3.4 ~ 4.0
Silent shaft plug gap		2.0 ~ 2.7
Silent shaft gear cover bolt		1.5 ~ 1.8
Connecting rod cap nut		4.5 ~ 4.8
Flywheel bolt		13 ~ 14
Crankshaft bearing cap bolt		7.5 ~ 8.5
Silent shaft chamber cover bolt		0.5 ~ 0.7
Oil relief valve plug		3.0 ~ 4.5
Oil pump cover bolt		0.9 ~ 1.4
Oil pressure switch		0.8 ~ 1.2
Oil filter bracket		1.2 ~ 1.5
Oil cooler by-pass valve		5.0 ~ 6.0
Oil jet check valve		3.0 ~ 3.5
Water pump bolt		1.2 ~ 1.5
Water pump pulley bolt		1.0 ~ 1.2

Deseription		Standard (kg · m)
Water outlet fitting attaching bolt		1.0 ~ 1.3
Coolant tempeature gauge unit		3.0 ~ 4.0
Thermo switch (113°)		0.9
Alternator brace bolt		1.2 ~ 1.5
Adjust rocker arm		1.2 ~ 1.5
Alternator support bolt nut		2.0 ~ 2.5
Intake fitting bolt		1.0 ~ 1.3
Intake manifold bolt		1.5 ~ 2.0
Heat protector bolt	M6	0.8 ~ 1.0
	M8	1.2 ~ 1.5
Oil return pipe bolt		0.8 ~ 1.0
Exhaust fitting nut		5.0 ~ 7.0
Turbo charger nut		5.0 ~ 7.0
Exhaust manifold nut		1.5 ~ 2.0

SEALANTS

Description	Sealants	Amount
Half circle packing	3M ATR P/No. 8660 or equivalent	As required
Oil pan gasket	3M ATR P/No. 8660 or equivalent	As required
Coolant gauge unit	3M nut rocking P/No. 4171 or equivalent	As required
Thermo switch (113°, A/con)	Threebond No.2440 or equivalent	As required

7. SPECIAL TOOLS

Tool (Number and name)	Illustration	Use
Silent shaft bearing puller (09212-43100)	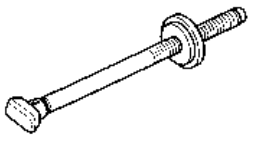 B1243100	Removal of silent shaft rear bearing
Silent shaft bearing installer (09212-43200)	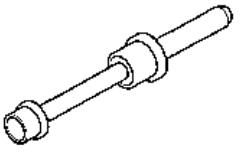 B1243200	Installation of silent shaft rear bearing
Bearing installer stopper (09212-43300)	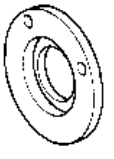 B1243300	Removal of Right silent shaft rear bearing
Crank shaft front oil seal installer (09214-32000)	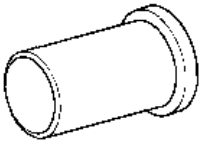 B1432000	Installation of crankshaft front oil seal
Crankshaft front oil seal guide (09214 - 32100)	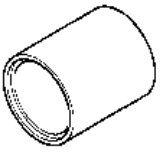 B1621100	Guide for installation of crank shaft front oil seal
Connecting - rod small - end busing replacement tool (09214-43000)	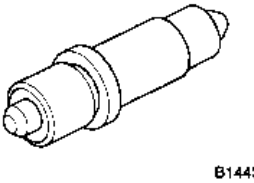 B1443000	Replacement of connecting - rod small - end bushing
Camshaft oil seal installer (09221-21000)	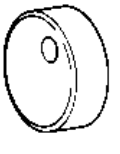 ECLA0021	Installation of camshaft oil seal

Tool (Number and name)	Illustration	Use
Cylinder head bolt wrench (09221-32000)	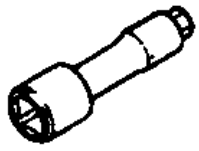 ECLA002A	Loosening and tightening of cylinder head bolt
Valve seat cutter pilot (09221-43200)	ECLA002B	Correction of valve seat
Valve seat cutter 45° (09221-43300)	ECLA002C	Correction of valve seat
Valve seat cutter 65° (09221-43400)	ECLA002D	Correction of valve seat
Valve seat cutter 30° (09221 - 43500)	ECLA002E	Correction of valve seat
Valve spring compressor (09222-21000)	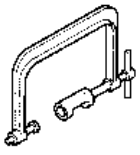 B2221000	Compression of valve spring
Valve stem seal installer (09222-32100)	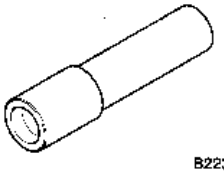 B2232100	Installation of valve stem seal

Tool (Number and name)	Illustration	Use
Valve guide installer (09222-32200)	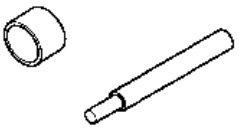 ECLA002F	Removal and Installation of valve guide
Silent shaft drive gear oil seal guide (09222-43200)	B2243200	Installation of silent shaft drive oil seal
Crankshaft rear oil seal installer (09232-32000)	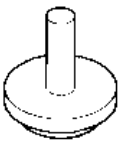 B3132000	Installation of crankshaft rear oil seal
Oil pressure switch wrench (09260-32000)	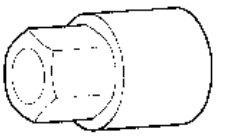 B6032000	Removal and Installation of oil pressure switch
Injection pump sprocket puller (09314-43000)	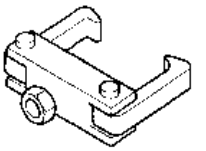 C1443000	Removal of injection of pump sprocket

8. Troubleshooting

Symptom	Probable cause	Remedy
Low compression	Blown cylinder head gasket	Install new head gasket
	Worn or broken piston rings	Hone cylinder bores and install new rings
	Warped or pitted valves	Install new valve
	Excessive run-out of valve seats on valve faces	Reconditioning valve seats and valves
Noisy valves	Incorrect of valve cleanrance	Adjust as standard and valve
	Worn valve guides	Install new valves and/or new valve guides with O.S.
Connecting rod noise	Excessive camshaft end play	Reconditioning valve seats and valve
	Insufficient oil supply	Correct end play
	Low oil pressure	Check engine oil level
		Check engine oil level
	Thin or diluted oil	Inspect oil relief valve and spring
	Excessive bearing clearance	Change oil to correct viscosity
	Connecting rod journals out-of-roundness	Measure bearings for correct clearance
	Misaligned connecting rods	Replace crankshaft or regrind journals
		Replace bent connecting rods
Crankshaft	Insufficient oil supply	Check engine oil level
Bearing noise	Low oil pressure	Check engine oil level
		Inspect oil relief valve and spring.
	Thin or diluted oil	Change oil to correct viscosilty
	Excessive end play	Measure bearings for correct clearances
	Crankshaft journal out-of-roundness worn	Replace crankshft or regrind journals
	Loosen flywheel	Tighten to correct torque
Piston noise	Excessive clearance due to cylinder wear	Correct cylinder wear
	Piston or piston pin worn	Replace piston
	Burnt piston	Install new piston
	Piston ring damaged	Install new rings

Symptom	Probable cause	Remedy
Oil leak	Oil pan drain plug loose	Tighten to torque
	Oil pan mounting bolt loose	Tighten to torque
	Oil pan gasket broken	Install new oil seal
	Crankshaft front oil seal defective	Install new oil seal
	Crankshaft front oil seal defective	Install new oil seal
	Rocker cover gasket broken	Install new oil seal
	Oil filter loose	Tighten to torque
	Oil filter gasket broken	Install new oil seal
Oil consumption	Worn, scuffed, or broken rings	Hone cylinder bores and install new rings
	Carbon in oil ring slot	Install new rings
	Ring fitted too tight in grooves	Remove the rings. Check grooves. If groove width is not , proper width, replace pistion.
	Faulty valve stem seals	Install new valve stem selas
Overheat	Low oil level	Check engine oil level
	Slow idle speed	Set idle speed to specification
	Faulty oil pressure switch	Install new switch
	Colgged oil filter	Install new oil filter
	Worn parts in oil pump	Replace worn parts or pump
	Thin or diluted oil	Change oil to correct viscosity
	Excessive bearing clearance	Measure bearings for correct clearance
	Oil relief valve stuck	Remove valve and inspect, clean and reinstall
	Oil pump cover bent or cracked	Install new oil pump
	Oil screen loose or clogged	Clean or replace screen
Insufficent coolant	Radiator leakage	Correct or replace
	Loose or damage radiator hose, heater hose	Retighten or replace
	Themostat water pump leakage	Retighten or replace
Radiator clogged	Coolant dirty	Replenish
	Damaged radiator cap	Replace
High coolant temperature	Damaged themostat	Replace
	Loose or broken belt	Correct or replace

9. CHECK POINT

CHECKING COOLANT RESERVIOR

1. Use an adapter to attach the cap to the tester.
2. Increase the pressure until the gauge stops moving. Check that the pressure level is maintained at or above the limit.

Main valve opening pressure	0.75 ~ 1.05 kgf/cm²
Main valve closing pressure	0.65 kgf/cm²

3. Replace the radiator cap if the reading does not remain at or above the limit.

NOTE
Be sure that the cap is clean before testing, since rust or other foreign material on the cap seal will cause an incorrect reading.

CHECKING COOLANT

1. Check that the coolant level of the reservoir tank is between FULL and LOW marks.
2. Check that the coolant is not mixed with oil.
3. The standard coolant concentration range is as below.

Standard	30 ~ 60% (normal range)

CAUTION
If the concentration of coolant falls below 30% or above 60%, vapor corrosion is not inhibited, cooling is not efficient or the engine part could become damaged or not work properly.

3. Antifreeze ratio

Delivery condition	Freezing temperature(°C)	Coolant quantity (9.5*l*)	
		Mixture ratio(%)	Antifreeze quantity(*l*)
40%	-15	30	10
	-20	35	2.45
	-25	40	2.80

REPLACE COOLANT

1. Loosen and remove the drain plug.
2. Remove the reservoir tank and drain coolant.
3. After draining the coolant, pour water into the coolant reservoir cap and clean the coolant passage.
4. Securely tighten the radiator drain plug.
5. Install the reservoir tank.
6. Fill the reservoir tank up to FULL line with coolant.

Coolant quantity	3.9*l*	Engine capacity
	9.5*l*	Overall capacity including the reservoir tank and radiator

7. Securely install the coolant reservoir cap.
8. Check the coolant quantity after warming up the engine and add coolant.

   ⚠ ***CAUTION***
   Do not open the coolant reservoir cap when it is hot. Steam and scalding liquids released from a hot cooling system can burn you badly.

CHECKING ENGINE OIL LEVEL

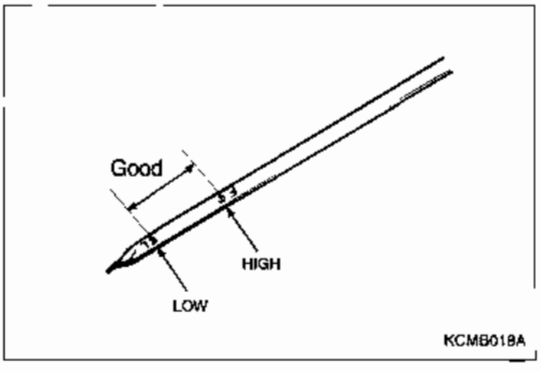

1. Pull out the engine oil indicator(dipstick) and wipe it clean with clothing.
2. Insert the indicator into the oil level gauge guide.
3. Remove the indicator carefully and check that the oil level is between LOW and HIGH marks as shown in the illustration.

   ⚠ ***CAUTION***
   - ***Make sure the vehicle is on a level ground.***
   - ***If the engine is running, turn the engine off and wait a few minutes before checking.***

4. If the oil level is below the LOW mark, add enough recommended oil.

Engine oil	Diesel	Above API CD SAE 10W30

   ⚠ ***CAUTION***
   Oil levels above the HIGH mark may cause engine damage.

5. After starting the engine, let it idle for a few minutes, stop the engine and recheck the engine oil level is within the normal range.

REPLACING ENGINE OIL

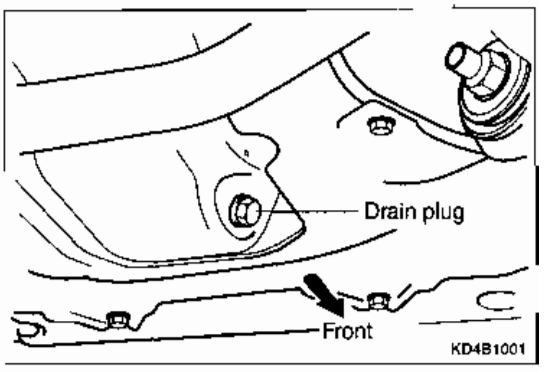

⚠ ***CAUTION***
When replacing engine oil and oil filter, do not drop engine oil in the alternator. Engine oil placed in the alternator may harm the alternator.

1. After warming up the engine, remove the oil filler cap.
2. Remove the drain plug and drain oil.

   ⚠ ***CAUTION***
   Protect yourself from the hot oil.

3. Tighten the drain plug.
4. Add new oil to the oil filler.

CHECKING AND ADJUSTING DRIVE BELT TENSION

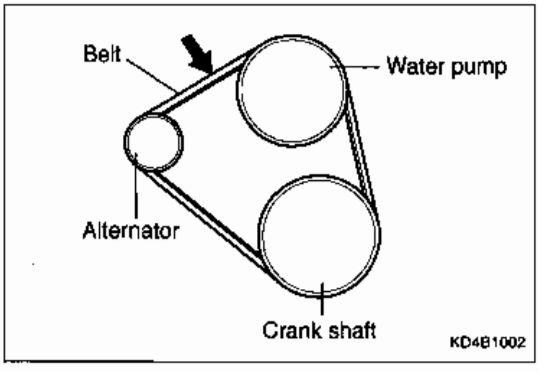

1. Inspect tension by pressing in the middle of belt with 10 kg·f as shown in the illustration.

   Standard

Alternator	10 ~ 13 mm

CHECKING AND ADJUSTING DRIVE BELT TENSION

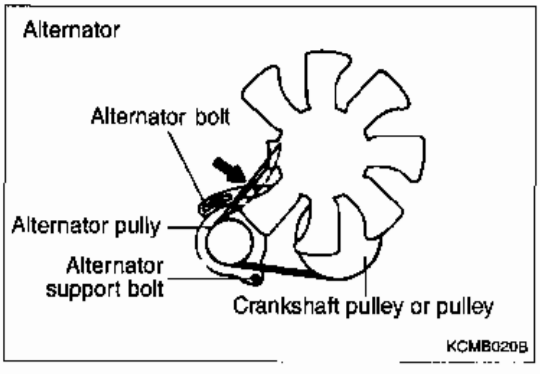

⚠ ***CAUTION***
Inspect tension after rotating the engine to one turn counterclockwise.

BELT ADJUSTMENT

1. Loosen the alternator support nut.
2. Loosen the alternator brace bolt.
3. Move the alternator to increase the belt tension to the standard value.

Standard	10 ~ 13 mm

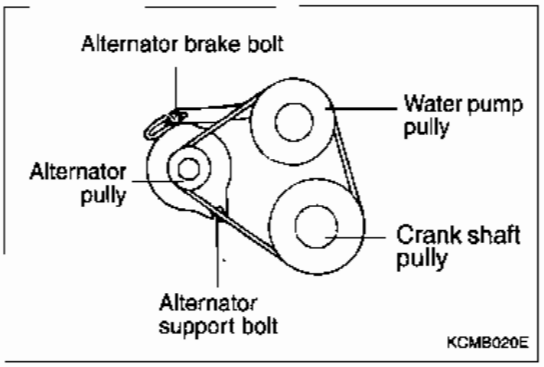

4. When using a tension gauge, move the alternator to the standard tension value.

Standard

	50 ~ 70 kg
Standard	40 kg

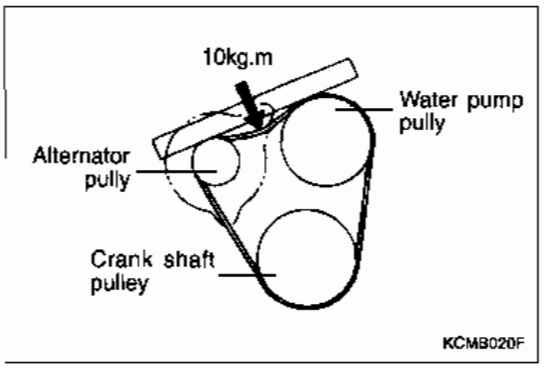

VALVE CLEARANCE ADJUSTMENT

1. Warm up the engine until the coolant temperature reaches 80~90°C.

2. Measure the valve clearance at arrow positions shown in the illustration.

Description	Hot engine
Exhaust valve	0.25 mm
Intake valve	0.25 mm

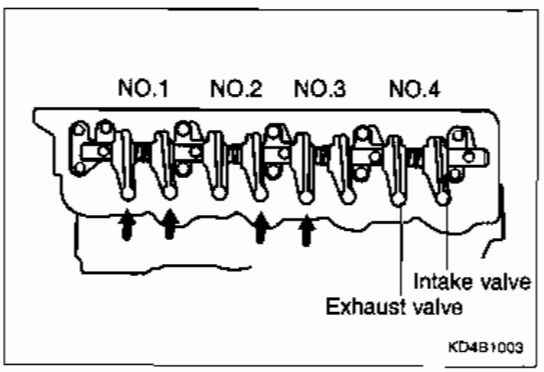

3. If the measured value exceeds the standard, loosen the locker arm nut and adjust clearance with the adjust screw turning using a thickness gauge.
4. Tighten the lock nut to the specified torque with the adjusting nut fixed not to rotate using a screwdriver.
5. Rotate the crankshaft to 360° place the cylinder no.4 to the dead point.

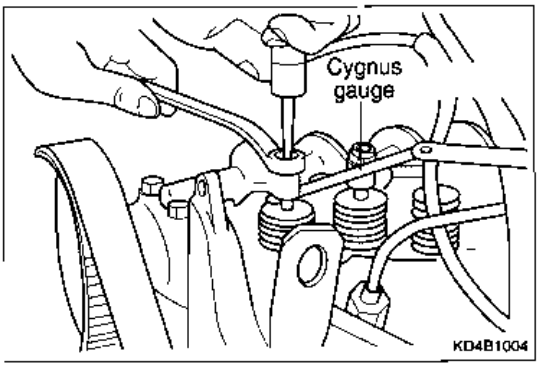

6. Measure valve clearance at arrow positions shown in the illustration.

( ) : Cold engine

Item	Hot engine
Exhaust valve	0.25 (0.15) mm
Intake valve	0.25 (0.15) mm

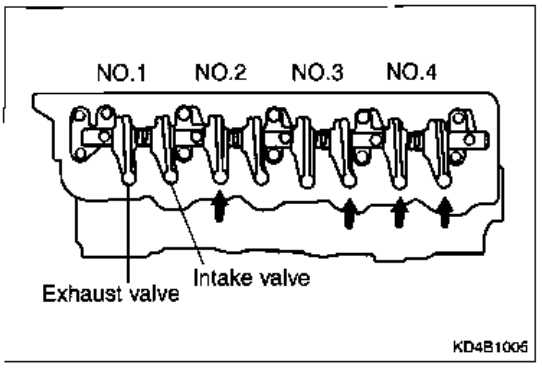

7. If the measured value exceeds the standard, adjust it as the procedures (6)~(7).
8. Inspect clearance of the intake and exhaust valves and adjust it if required.

Standard	0.25 mm

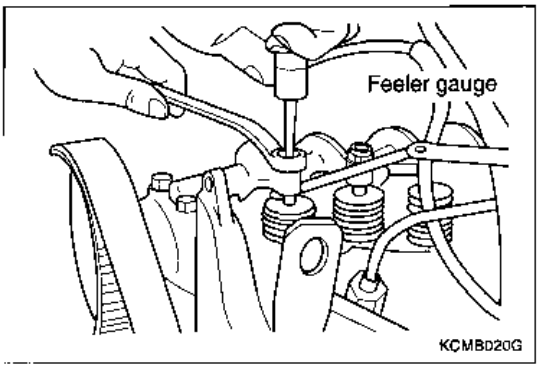

VALVE CLEARANCE ADJUSTMENT

1. Check the engine oil, starter and battery for normal operation.
2. Warm up the engine until the coolant temperature reaches 80~90°C.
3. Engage the gauge adapter and install the preheat plug to the pressure gauge.

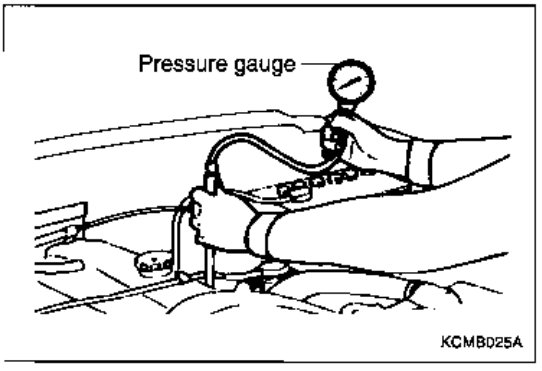

4. Crank the engine and measure the pressure.

Limit (250rpm)	19.2 kg/cm²

5. Check that the measured value of each cylinder is within the limit.

Limit	3.0 kg/cm²

CHECKING COMPRESSED PRESSURE

1. Disassemble the timing belt upper cover.
2. Rotate the crankshaft clockwise to place the cylinder no.1 to the dead point. Check that the timing mark on the sprocket is aligned.

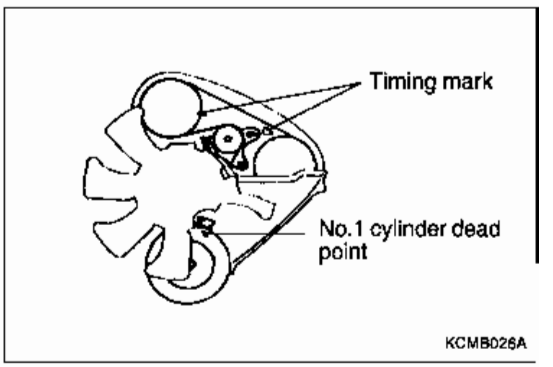

3. Loosen the spiral bolt to a turn and the groove nut to 1-2 turns.

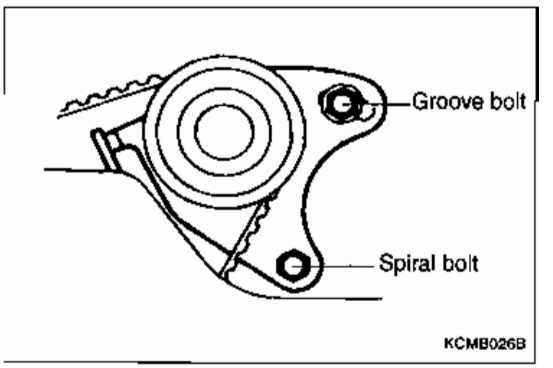

4. Rotate the crankshaft clockwise to the second gear of the camshaft sprocket.
5. Fix the tensioner groove bolt and tighten the spiral bolt to the specified torque.

Tightening torque	2.2 ~ 3.0 kg · m

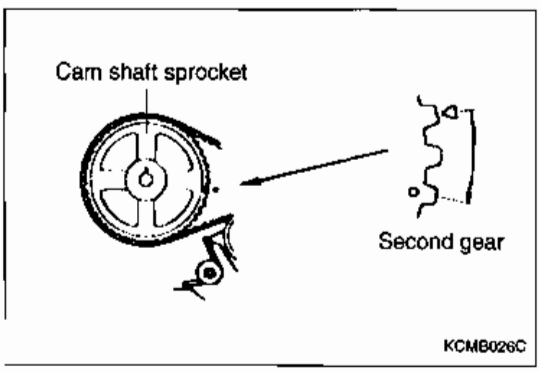

6. Rotate the crankshaft counterclockwise to align it to the timing mark.
7. Check the belt tension by pressing the middle of cam sprocket and injection pump sprocket with hand.

Standard	4 ~ 5 mm

8. Assemble the timing belt upper cover.

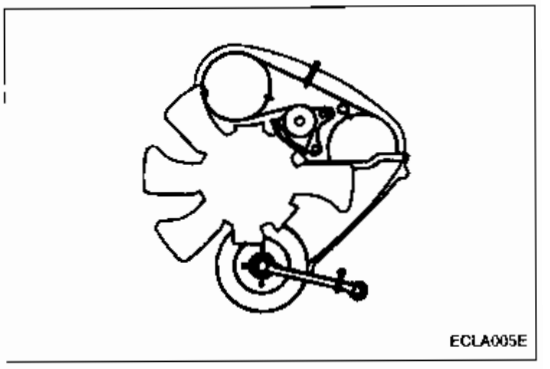

ADJUSTING TIMING BELT "B" TENSION

1. Disassemble the timing belt upper cover.
2. Rotate the crankshaft clockwise to place the cylinder no.1 to the dead point.

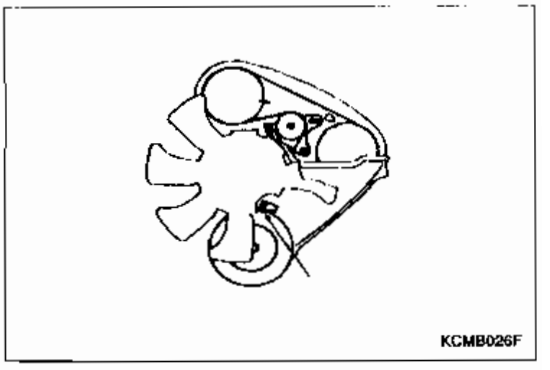

3. Remove the access cover.

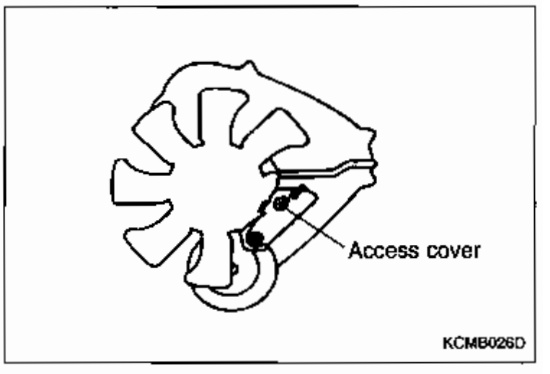

4. Loosen the spiral bolt to a turn and the groove nut to 1-2 turns.
5. First tighten the tensioner groove bolt and then the spiral bolt to the specified torque.

Tightening torque

Bolt	2.0 ~ 2.7 kg · m
Nut	2.2 ~ 3.0 kg · m

6. Assemble the access cover.
7. Install the timing belt upper cover.

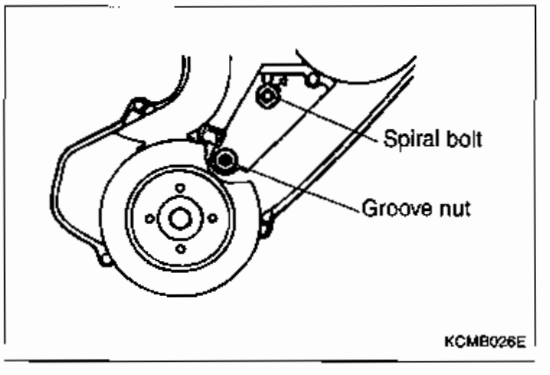

CHECKING INJECTION TIMING

1. Stop the cold starting advance angle function. Insert a screwdriver into the lever lower groove and turn it as shown in the illustration.

   ⚠ ***CAUTION***
   Do not turn the lever too much.

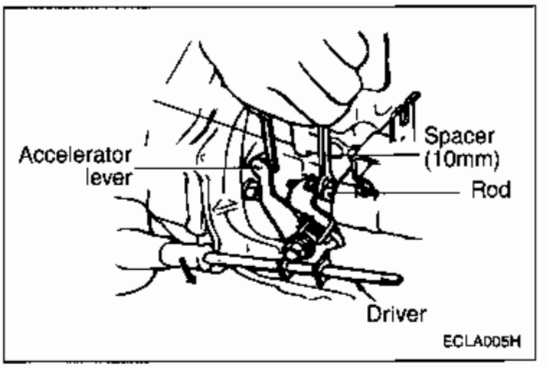

2. Insert the spacer (thickness: 10mm) between the rod and adjusting screw.
3. Remove the screwdriver.

   ⚠ ***CAUTION***
   When checking and adjusting to replace the injection pump, stop the advance angle function not to result in lack of power.

WAX TYPE COLD STARTING EQUIPMENT

This unit is adopted at low temperature to properly correct the fuel injection timing according to the engine coolant temperature.

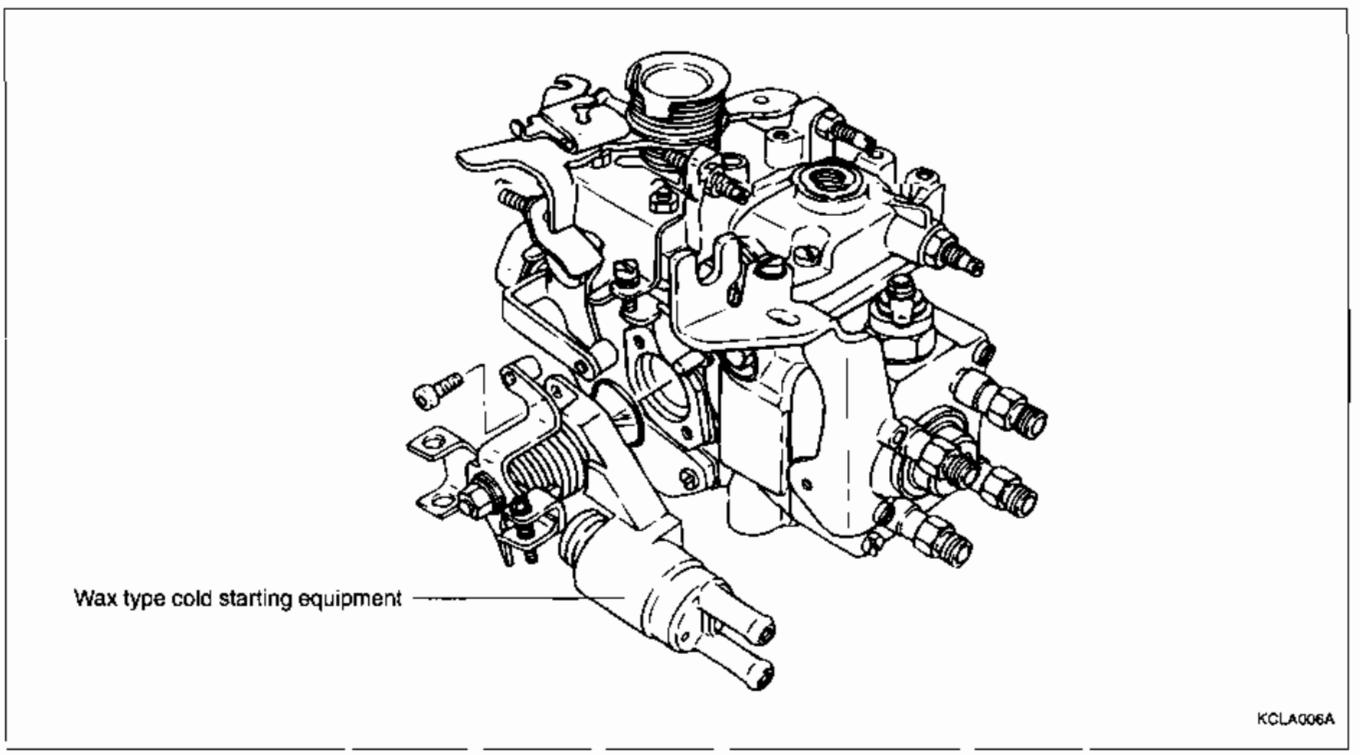

STRUCTURE

1. Wax is sealed in the cold starting equipment, so the piston rod is operated according to the engine coolant temperature.

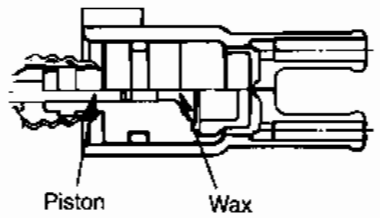

KCLA006B

2. The lever is rotated by the piston and the roller puller is operated by pin(B) to control the injection timing in retard or advance. The torsion spring pushes the piston to the injection timing advance angle direction.

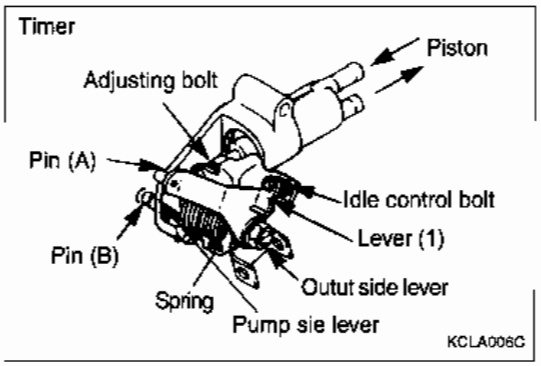

KCLA006C

3. According to the engine coolant temperature except for the injection timing, the rod connected in the accelerator lever adjusts the engine idle speed.

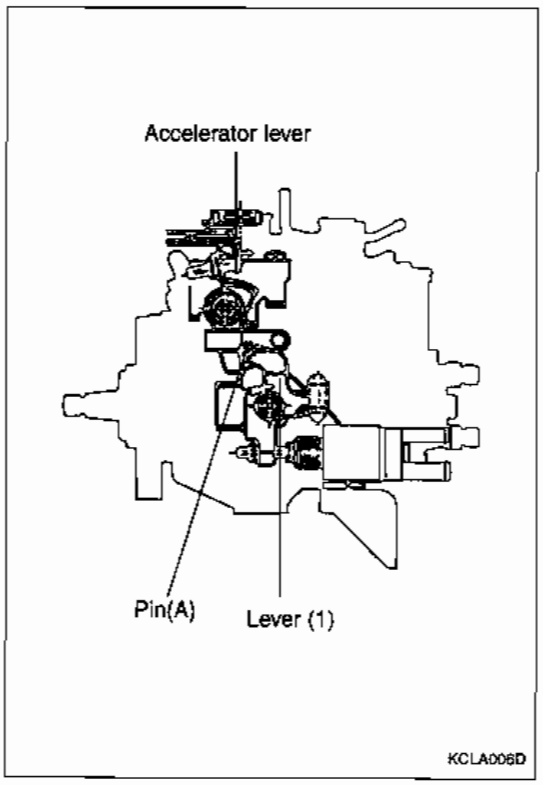

KCLA006D

ADJUSTING INJECTION TIMING

⚠ ***CAUTION***
Adjust the injection timing with the engine stopped.

1. Rotate the crankshaft to place the cylinder no.1 to the compression dead point.

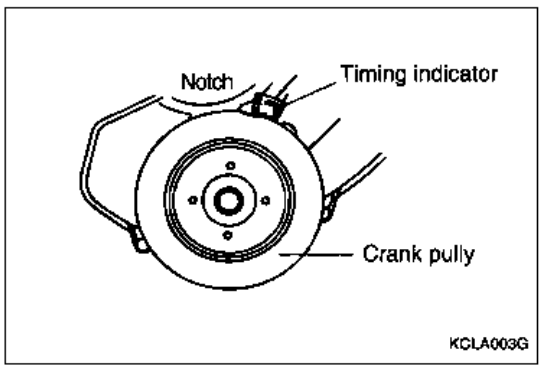

2. Loosen the four union nuts in the injection pump side injection pipe and temporarily tighten them. Fix the distribution holder using a spanner not to be turned during loosening the union nut.

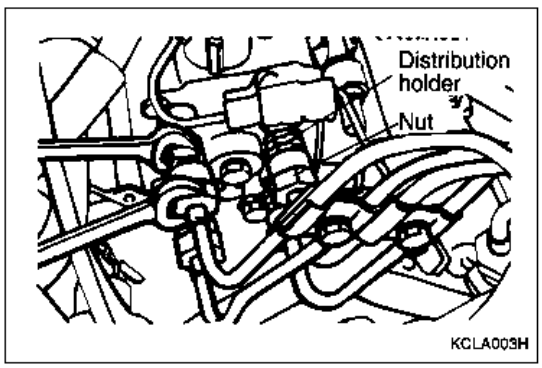

3. Loosen the injection pump mounting nut and temporarily tighten it.

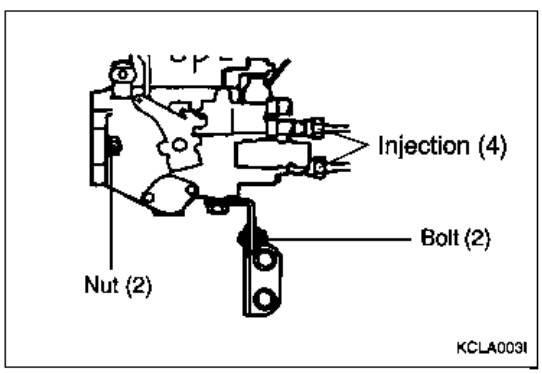

4. Remove the timing check plug from the injection pump.

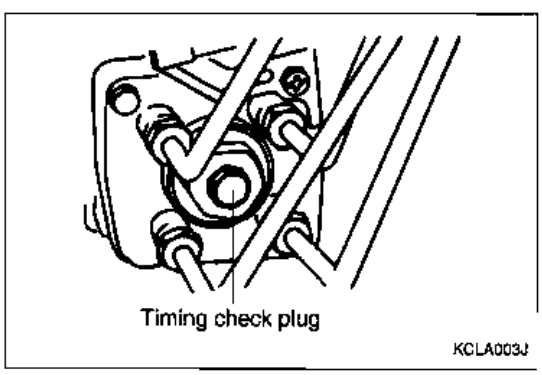

5. Before installing the special tool, check that the push rod is jutted out about 10mm. Protrusion of the push rod is adjusted by the inner nut.

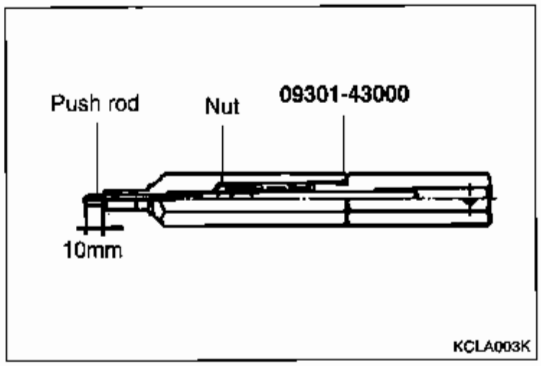

6. Install the dial gauge by installing the special tool to the injection pump.

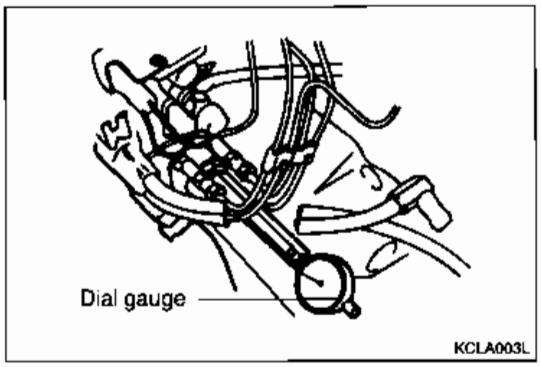

7. Align the crank pulley to 30° front of the cylinder no.1 compression dead point.
8. Set the dial gauge to read '0'.
9. Slightly move the crank pulley notch left and right and check that the pointer moves away from 0 position.
   If the pointer is unstable, realign the notch position to 30° front of the dead point

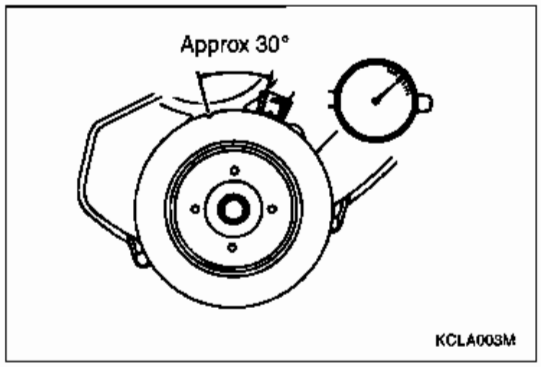

10. Rotate the crankshaft to the right to place the pulley notch to 5°.

Normal injection timing	ATDC 5°

Recheck the dial gauge is within the standard.

Standard	1± 0.03 mm

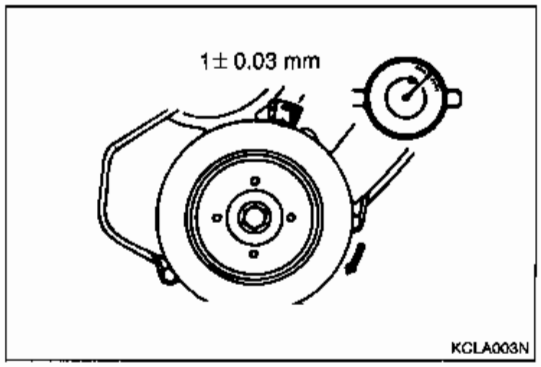

11. If the pointer of dial gauge is out of the standard values, move the injection pump body left or right to correct and tighten the injection pump mounting nut and bolt to the specified torque.
12. After adjusting, repeat the procedures (7) and (10) to check that the adjustment is correct.

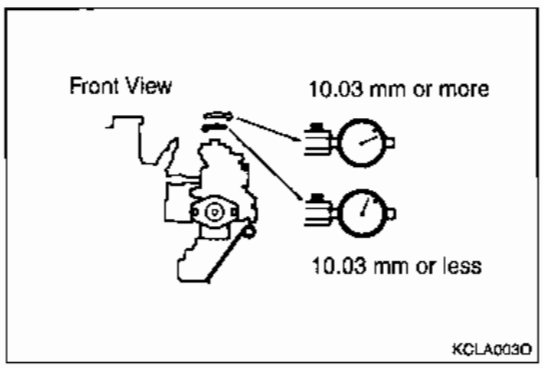

13. Detach the dial gauge and special tool and install the gasket and plug.
14. Install the injection pipe nut.
    Fix the spanner not to turn the distribution holder together.
15. Install a new gasket and tighten the plug to the specified torque.

Tightening torque	2.3 ~ 3.7 kg · m

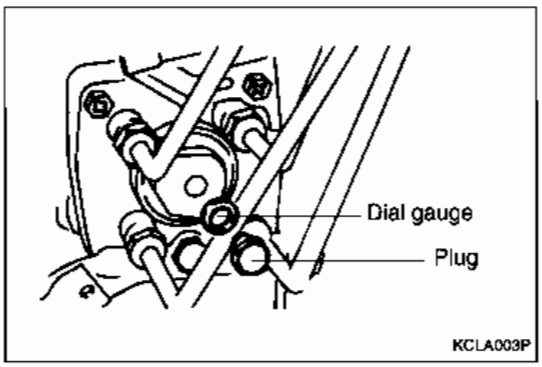

CHECKING AND ADJUSTING ENGINE IDLE SPEED

⚠ ***CAUTION***
Only use the idle speed adjusting screw.

1. Before checking and adjusting
   - Engine coolant temperature: 80~90°C
2. Check the injection timing and valve clearance and adjust them if required.
3. Install the idle speedometer.
4. Measure the engine idle rpm.

Standard	750± 100 mm

5. If the measure the value is out of the standard, loosen the lock nut and adjust it within the standard values by turning the adjusting screw.
6. After adjusting, tighten the lock nut.

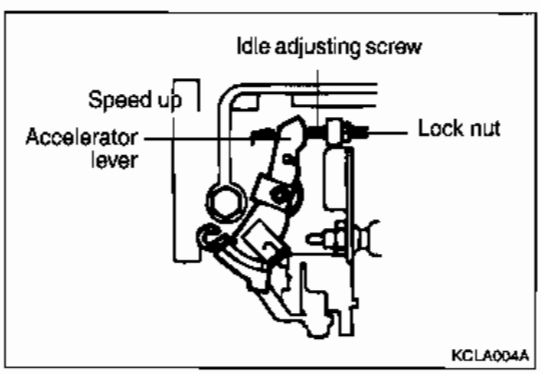

CHAPTER 2. ENGINE MECHANICAL SYSTEM

1. CYLINDER HEAD ASSEMBLY 2- 1
2. TIMING SYSTEM 2- 14
3. FRONT CASE 2- 25
4. MAIN MOVING SYSTEM 2- 31
5. CYLINDER BLOCK 2- 41

1. CYLINDER HEAD ASSEMBLY

1) LOCKER ARM & CAM SHAFT

COMPONENTS

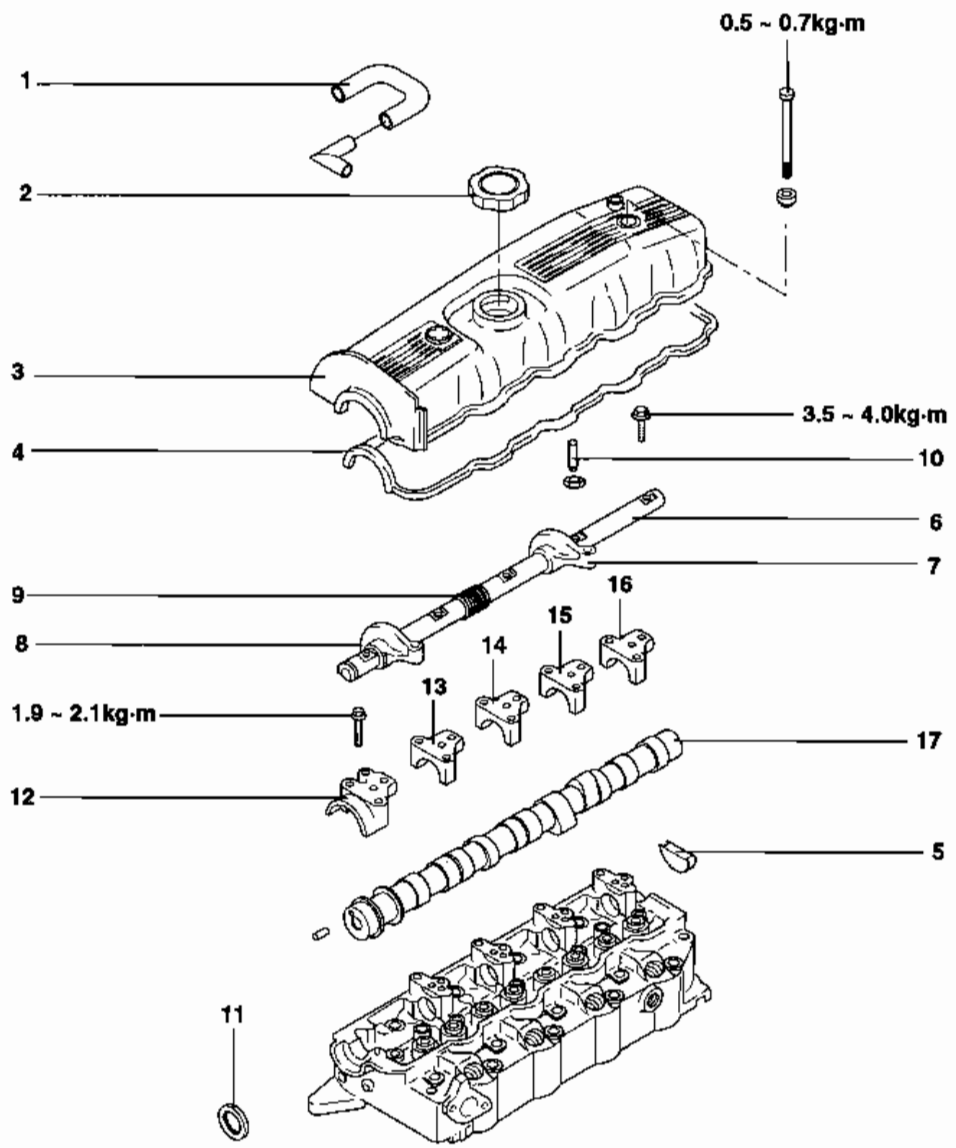

<Disassembly>

1. Breather hose
2. Oil filler cap
3. Rocker cover
4. Rocker cover gasket
5. Packing
6. Rocker shaft
7. Rocker arm, Intake
8. Rocker arm, Exhaust
9. Rocker shaft spring
10. Adjust screw
11. Camshaft oil seal
12. Camshaft bearing cap - Front
13. Camshaft bearing cap No.2
14. Camshaft bearing cap No.3
15. Camshaft bearing cap No.4
16. Camshaft bearing cap - Rear
17. Camshaft

KCM8800A

INSPECTION

CAMSHAFT

1. Visually inspect the camshaft journals and replace them if they are damaged and burned.
   If the camshaft journals have burned, check the cylinder head bearing for damage and the cylinder head oil passage for clogging.

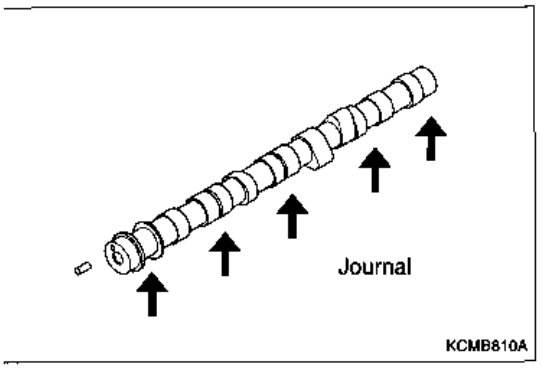

2. Measure the camshaft diameter and bearing inner diameter and if the oil clearance exceeds the limit value, replace the camshaft, cylinder head or both.

Standard	0.05 ~ 0.08 mm
Limit	0.13 mm

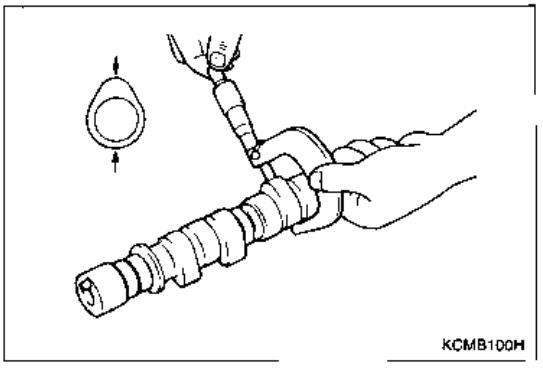

3. Check the cam surface for abnormal wear or damage and replace it if required.
   Measure the cam height (bigger diameter) and replace it if it exceeds the limit.

Standard	37.05 mm
Limit	36.55 mm

ROCKER ARM

1. Check the contact surface with the cam and replace the rocker arm if it damaged and burned.
2. Visually check the inside for damage or burn and replace it if required.
3. Measure the inner and outer diameters and if the oil clearance exceeds the limit, replace the rocker arm, shaft or both.

Standard	0.01 - 0.04 mm
Limit	0.08 mm

ROCKER SHAFT

1. Check the oil passage for clogging and clean it if required.
2. Check the rocker arm assembly for damage or burn and replace it if required.

ASSEMBLY

CAM SHAFT

1. Measure A and B, calculate the end play, and if the value exceeds the limit, replace parts.

   B - A = End play

Standard	0.01 - 0.04 mm
Limit	0.08 mm

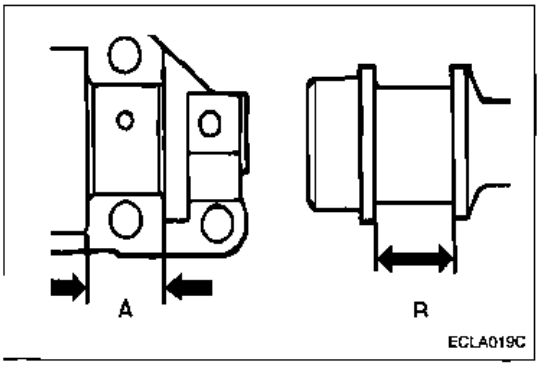

2. Install the camshaft with the dowel pin upward to the cylinder head.

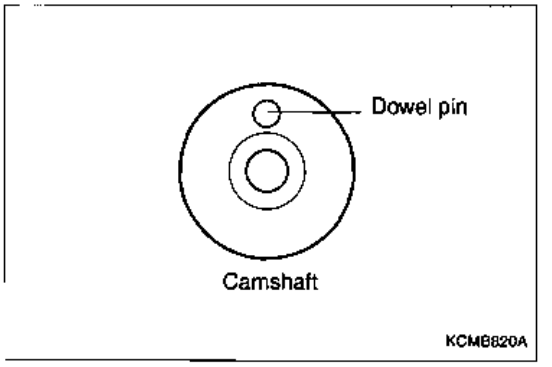

CAM SHAFT BEARING CAP

Assemble the camshaft bearing cap in sequence of the identification number engraving on the upper surface of bearing cap.

CAM SHAFT OIL SEAL

1. Using the special tool, press-fit a new camshaft oil seal to the front bearing cap portion.
2. Apply oil to the oil seal lip portion.

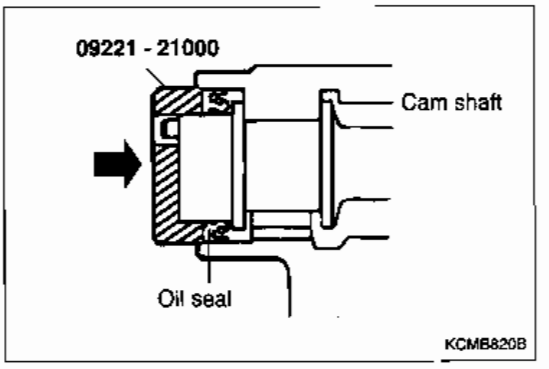

ROCKER ARM (EXHAUST, INTAKE)

Take care not to make mistakes of the identification numbers.

ROCKER ARM SHAFT

1. Assemble the oil passage side shown in the illustration, facing it downward.
2. The shaft having one oil passage should be assembled in the front.

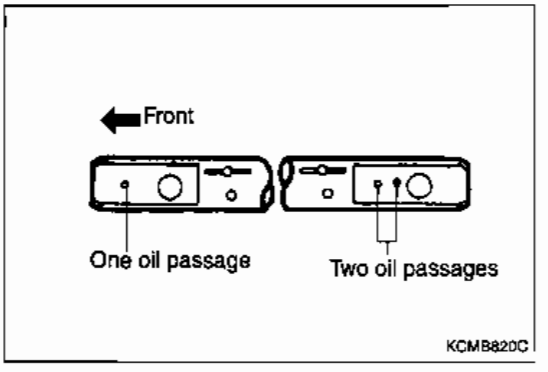

PACKING

Apply sealant to the marked portion in the illustration.

Specified sealant	3M P/No. 8660 or equivalent

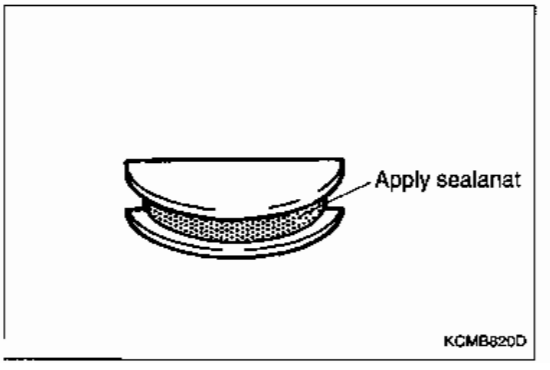

ADJUSTING VALVE CLEARANCE

1. Rotate the crankshaft clockwise to align the camshaft sprocket with the timing mark.

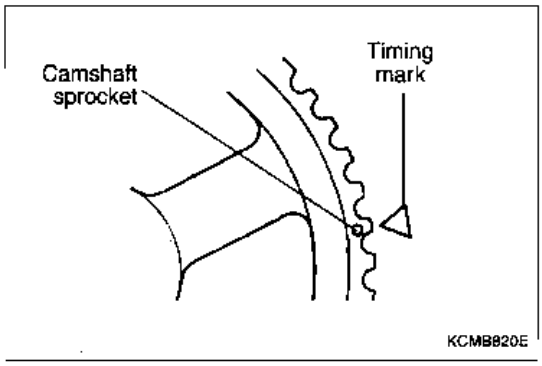

2. Adjust the valve clearance at the arrow position shown in the illustration.

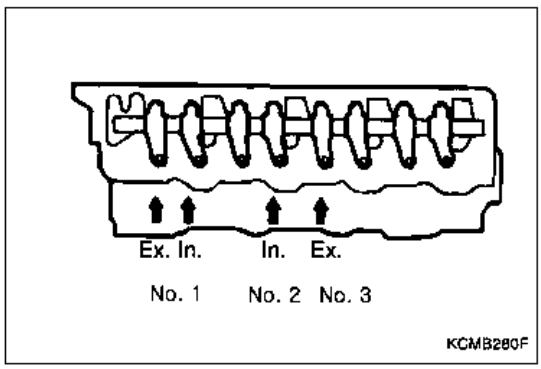

3. Loosen the adjusting screw mounting nut.
4. Adjust the valve clearance by turning the adjusting screw.

Standard (Cold engine)

Intake	0.15 mm
Exhaust	0.15 mm

5. Fix the adjusting screw not to turn using a screwdriver and install the adjusting nut

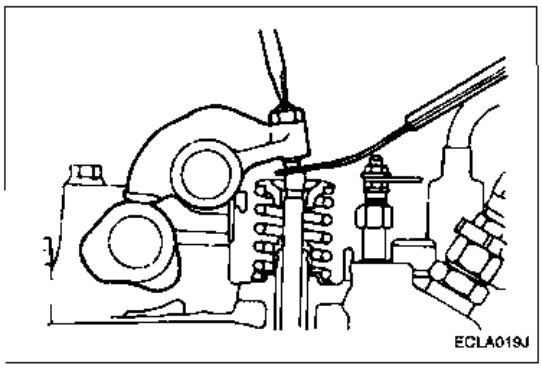

6. Rotate the crankshaft to one turn clockwise to place the cylinder no.4 to the compression dead point.
7. Follow the procedures (2), (3) and (4) to adjust the valve clearance.

Standard (Hot-engine)

Intake	0.25 mm
Exhaust	0.25 mm

8. After installing the engine assembly to the vehicle, inspect the valve clearance with hot engine and adjust it if required.

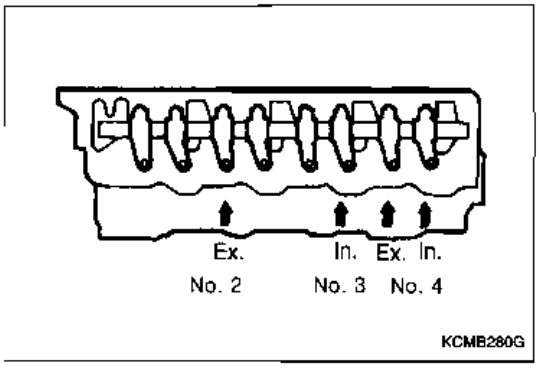

2) CYLINDER HEAD & VALVE

COMPONENTS

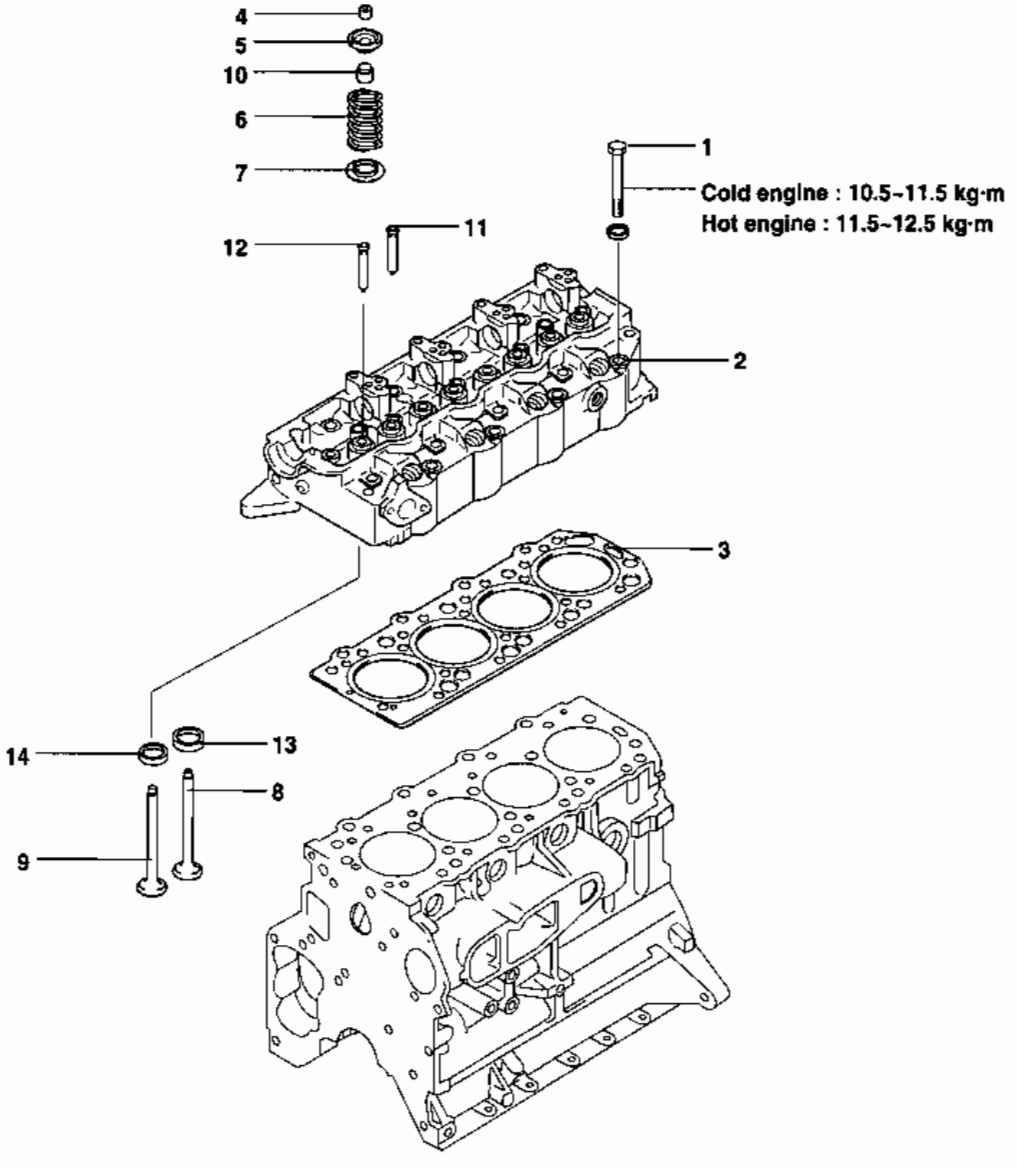

[DISASSEMBLY]

1. Cylinder head bolt
2. Cylinder head
3. Cylinder head gasket
4. Valve spring retainer lock
5. Valve spring retainer
6. Valve spring
7. Spring seat
8. Intake valve
9. Exhaust valve
10. Valve stem seal
11. Intake valve guide
12. Exhaust valve
13. Intake valve seat
14. Exhaust valve

DISASSEMBLY

CYLINDER HEAD BOLT

Using the special tool, Cylinder Head bolt Wrench (09221-32000), loosen 18 Cylinder head bolts and remove them. Loosen the bolts in the sequence shown and in two to three steps.

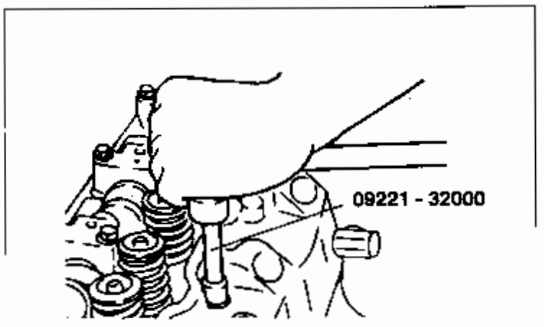

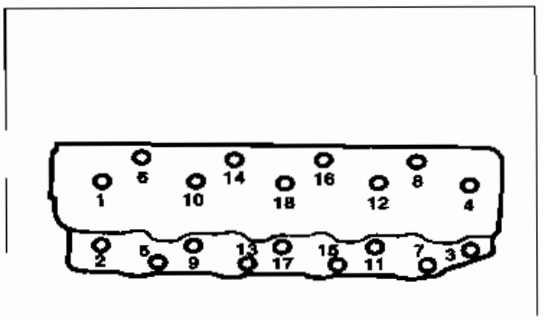

VALVE SPRING RETAINER LOCK

1. Using a valve spring compressor (09222 - 21000), compress the spring and fit the retainer lock in position.
2. The valve spring, if compressed excessively, causes the bottom end of retainer to be in contact with, and damages, the stem seal.

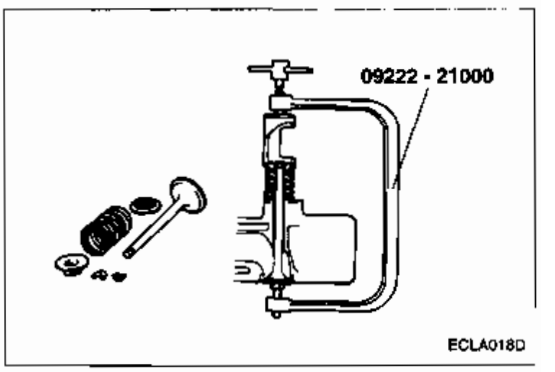

INSPECTION

CYLINDER HEAD

1. Before cleaning the cylinder head, check for water and oil leaks, damage, or cracks.
2. Remove oil, scale, sealant, and carbon deposits completely. After cleaning the oil passages, apply compressed air to ensure that the passages are not clogged.

3. If there is gas leak from the cylinder head gasket surface, measure the surface flatness. If distortion exceeds the limit, replace the cylinder head.

Standard value	0.05 mm less than
Limit L	0.2 mm

4. Visually check the camshaft bearing internal surfaces for damage or seizure. If defects are evident, replace the bearing.

INTAKE VALVE, EXHAUST VALVE

1. If the valve stem develops wear (taper wear) or damaged, replace. If there is a dent in the stem end face (the surface in contact with the rocker arm adjust screw), replace.

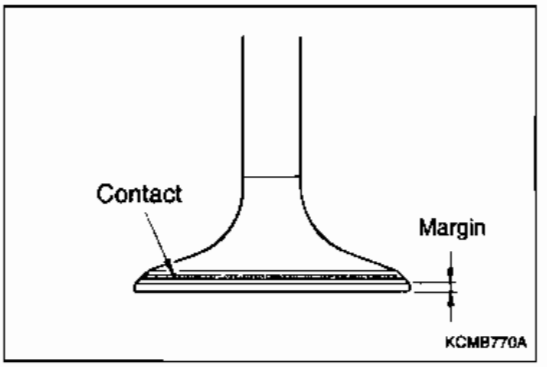

2. Check the valve face for contact. If the contact is not proper, correct with a valve refacer. The contact pattern with the valve seat must be even at the center of valve face.
3. Replace if the margin (valve head thickness) exceeds the limit.

Standard value	2.0 mm
Limit	1.0 mm

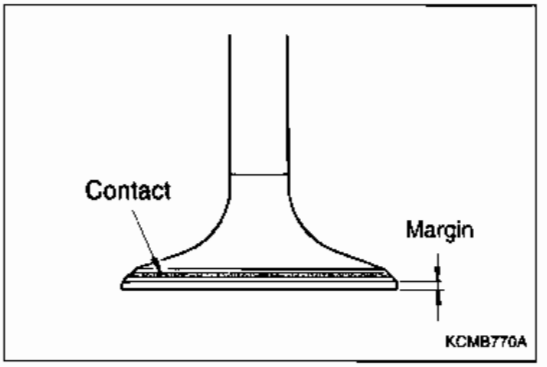

VALVE SPRING

1. Measure the free height of spring and replace if the limit is exceeded.

Standard value	49.1 mm
Limit	48.1 mm

2. Measure the squareness of the spring and, if the limit is exceeded, replace.

Standard value	2° less than
Limit	4°

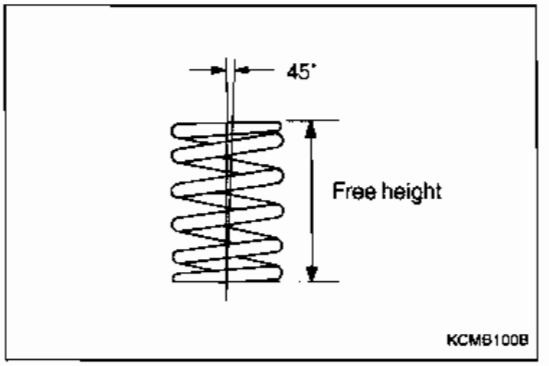

VALVE GUIDE

Measure the valve guide to stem clearance and, if the measurement exceeds the limit, replace the valve guide or valve, or both.

Standard value	Exhaust	0.05 ~ 0.09 mm
	Intake	0.03 ~ 0.06 mm
Limit	Intake	0.10 mm
	Exhaust	0.15 mm

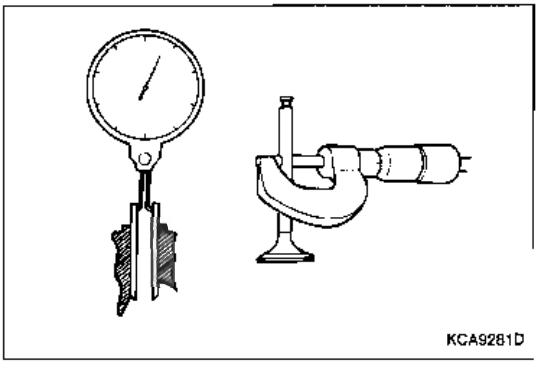

RECONDITIONING VALVE SEAT

1. When reconditioning the valve seat, inspect clearance between the valve guide and valve and replace the valve guide if required.
2. Using the special tool or valve grinder, correct the seat width and angle to the specified value.

VALVE SEAT CUTTER

Cutter angle	Parts number
45°	09221-43300
65°	09221-43400
30°	09221-43500

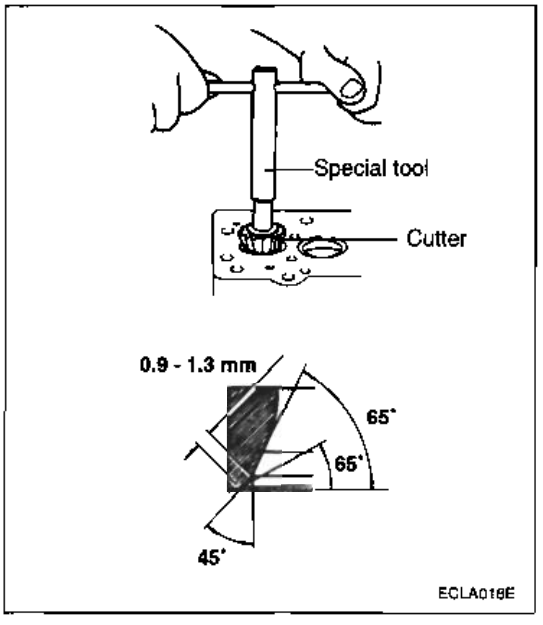

3. Apply compound to the valve and seat.

VALVE SEAT REPLACEMENT PROCEDURE

1. Cut the valve seat to be replaced from the inside to thin the wall thickness. Then, replace the valve seat.
2. Rebore the valve seat hole in cylinder head to the oversize valve seat diameter.

Intake valve seat ring hole diameter	0.30 O.S.	43.300 ~ 43.325mm
	0.60 O.S.	43.600 ~ 43.625mm
Exhaust valve seat ring hole diameter	0.30 O.S.	37.300 ~ 37.325mm
	0.60 O.S.	37.600 ~ 37.625mm

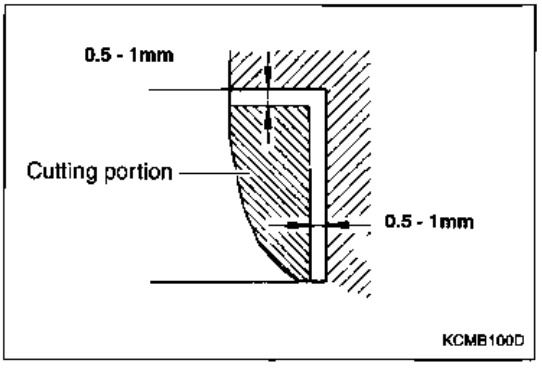

3. Before fitting the valve seat, either heat the cylinder head up to approximately 250°C (482°F) or cool the valve seat in liquid nitrogen to prevent the cylinder head bore from abrasion.
4. After installation, recondition the valve seat.

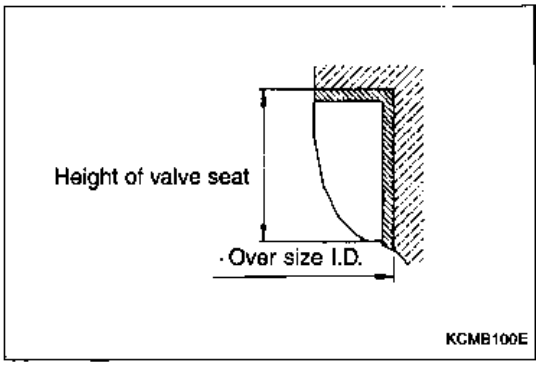

VALVE GUIDE REPLACEMEMT PROCEDURE

1. Using the push rod of Valve Guide installer (09222 - 32200) and apress, remove the valve guide forward cylinder block.
2. Rebore valve guide hole to the new oversize valve guide outside diameter.

0.05 O.S.	13.050 ~ 13.068 mm
0.25 O.S.	13.250 ~ 13.268 mm
0.50 O.S.	13.500 ~ 13.518 mm

⚠ ***CAUTION***
Do not reassemble the same size of valve guide.

3. Using Valve Guide Installer (09222-32200), press-fit the valve guide, working from the cylinder head top surface.

⚠ ***CAUTION***
Take care not to change the exhaust and intake valve guides because both lengths are not equal.

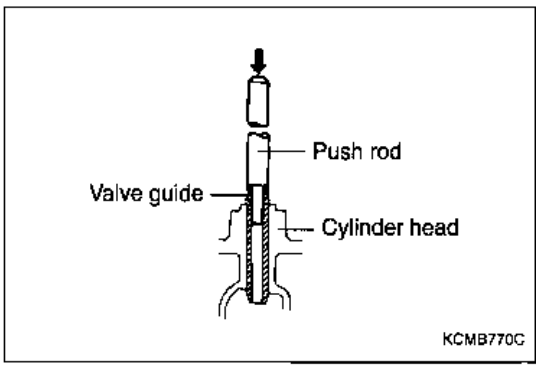

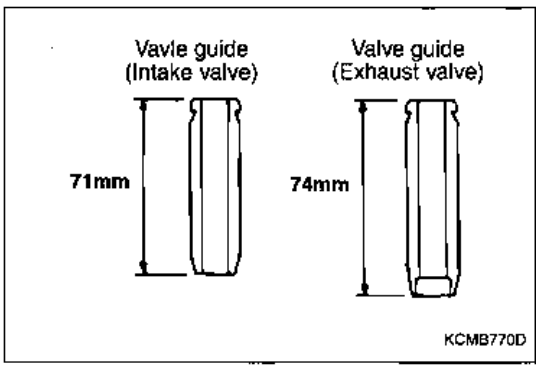

4. After installing valve guides, insert new valves in them to check for sliding condition.
5. When replacing the valve guides, inspect valve contact and correct the valve seat if required.

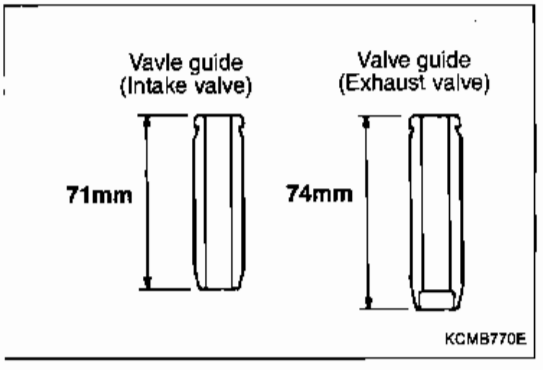

INSTALLATION

VALVE STEM SEAL

1. Using Valve Stem Seal Installer (09222 - 32100), install the valve stem seal into the valve guide.

   ⚠ ***CAUTION***
   - ***The valve stem seal must be not reused.***
   - ***The special tool must be used for the installation of the valve stem seal. Improper installation could result in oil consumption through valve guide.***

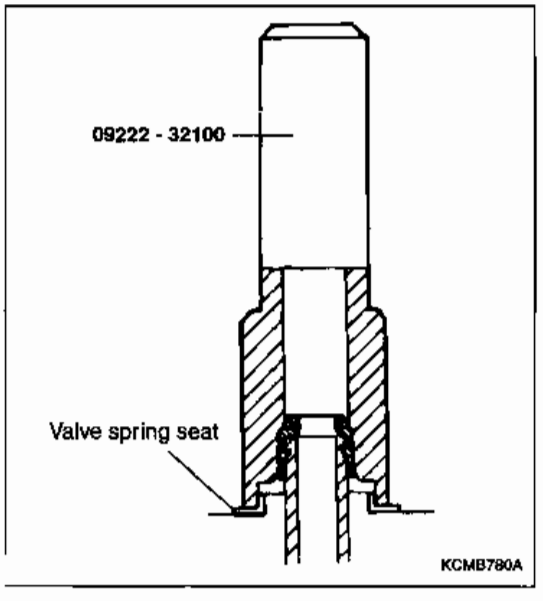

VALVE SPRING

Direct the valve spring end with identification color to the therocker arm.

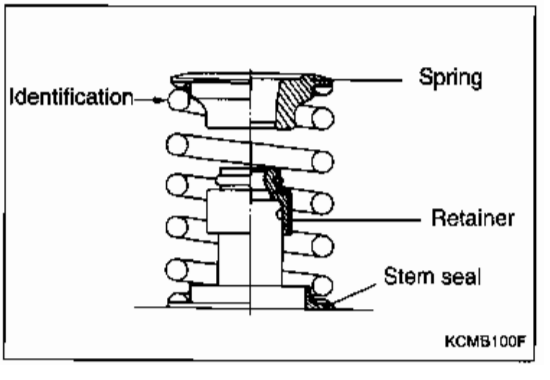

VALVE SPRING RETAINER LOCK

Using a valve spring compressor (09222 - 21000), compress the spring and fit the retainer lock in position.

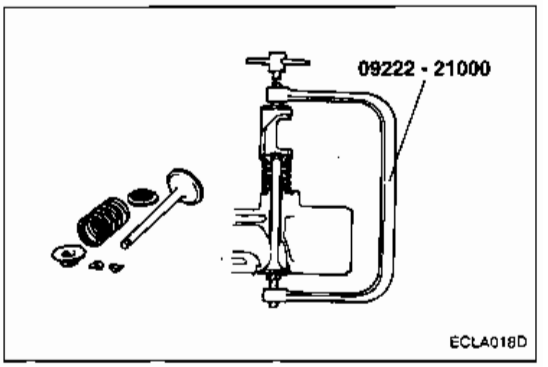

⚠ ***CAUTION***

The valve spring, if compressed excessively, causes the bottom end of retainer to be in contact with, and damages, the stem seal.

CYLINDER HEDA GASKET

1. Clean contact surfaces between the cylinder head and cylinder block gasket.
2. Assemble the gasket facing upward the marking portion in the illustration.

CYLINDER HEAD BOLT

1. Scrape off gasket adhered to cylinder head assembly.
2. Tighten in the numerical order indicated in the diagram in two or three groups with special tool.

Specified torque

Limit	11.5 ~ 12.5 kg·m
Cold engine	10.5 ~ 11.5 kg·m

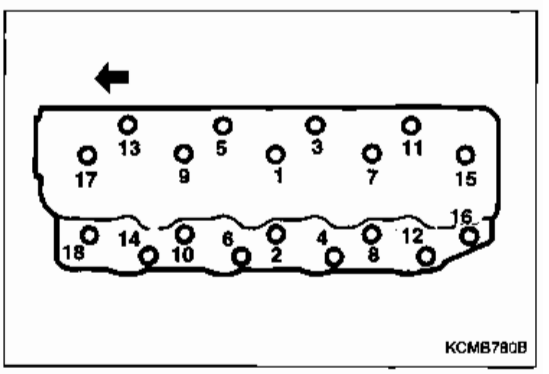

2. TIMING SYSTEM

1) TIMING BELT

COMPONENTS

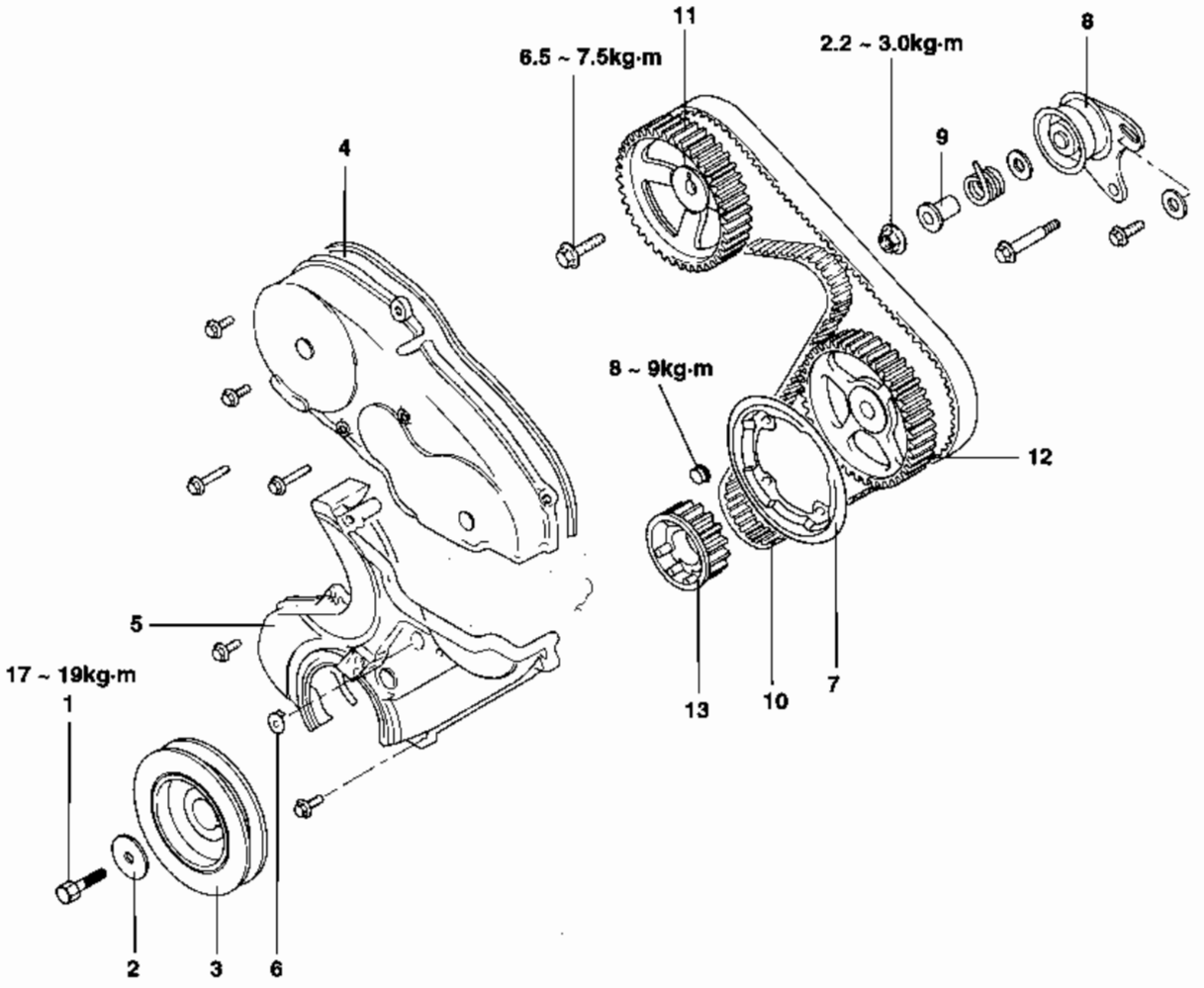

[DISASSEMBLY]

1. Crank shaft pully bolt
2. Washer
3. Crank shaft pully
4. Timing belt upper cover
5. Timing belt lower cover
6. Acess cover
7. Flange
8. Timing belt tensioner
9. Tensioner speacer
10. Timing belt
11. Camshaft sprocket
12. Injection pump sprocket
13. Crank shaft sprocket

KCMB650A

REMOVAL

TIMING BELT

1. Remove the cooling fan, water pump, crankshaft pulley and timing belt cover.
2. Turn the crankshaft to bring the piston in No. 1 cylinder to the top dead center on the compression stroke.
3. Mark an arrow on the back of the timing belt and timing belt B with a chalk to indicate the direction of rotation. This ensures that the belt is installed in the same direction for reuse.

⚠ ***CAUTION***
Stained belts with water or oils may be highly short enedtheir life. So, the removed timing belt, sprocket and tensioner should not be washed off, as well as not be stained with oils. If the belts are seriously stained, replace them.

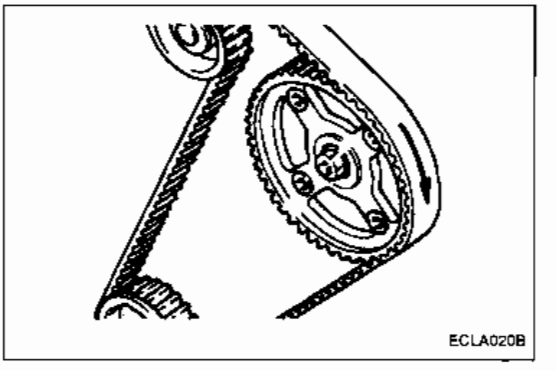

4. The piston in No. 1 cylinder is at the top dead center on the compression stroke when all timing marks at the three places are aligned as shown.

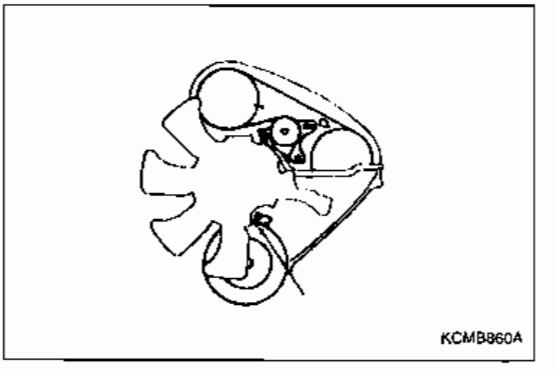

5. Slightly loosen the two bolts securing the tensioner. Then, slide the tensioner toward the water pump and tighten the bolts temporarily to secure the tensioner in place.

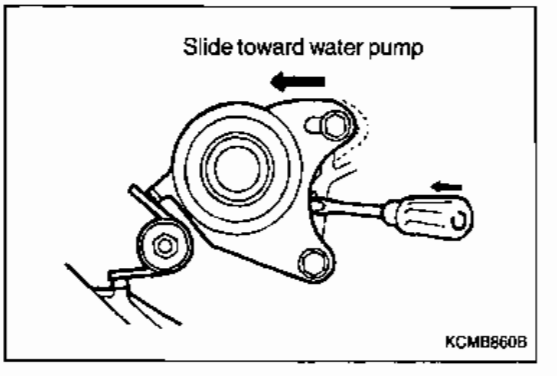

CAMSHAFT SPROCKET

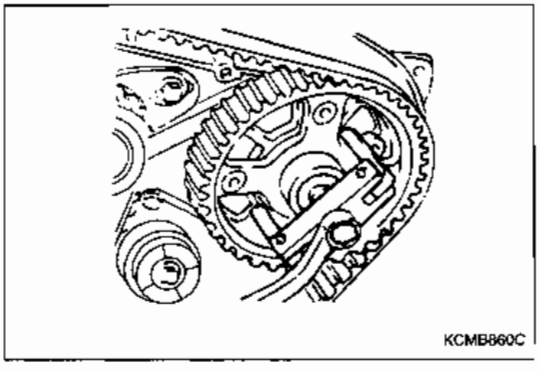

1. Loosen the bolt securing the camshaft sprocket and remove the camshaft sprocket.
2. Remove the sprocket nut.

   ⚠ ***CAUTION***
   Use care not to give shock to the fuel injection pump shaft, as it could result in defective fuel injection pump. Using Injection Pump Sprocket Puller (09314 - 43000) or suitable tool, remove the sprocket from injection pump.

3. Remove the tensioner and tensioner spring.

INSPECTION

TIMING BELT

Carefully inspect the belt and replace it with a new one if there are damages presented as below.

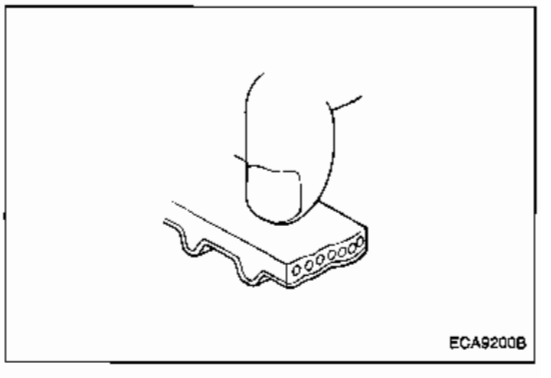

1. Hardened back surface of rubber
   Back surface is glossy, Non-elastic and so hard that, when your fingernail is pressed into it, no mark is produced.

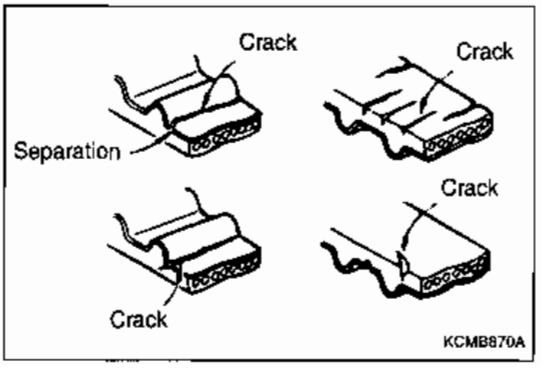

2. Cracked back surface of rubber
3. Cracked or separating canvas
4. Badly worn out teeth (initial stage)
5. Badly worn out teeth (last stage)

6. Side of belt cracked
   Normal belt should have precisely cut side as if produced by a sharp knife.

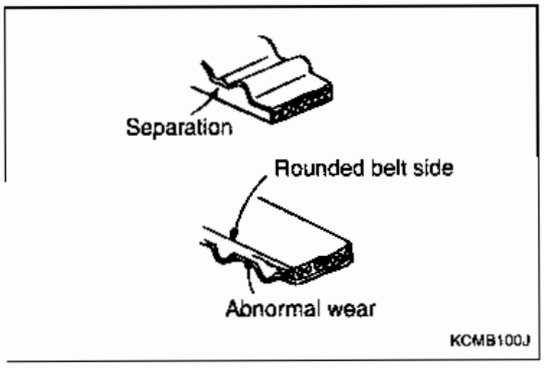

7. Cracked tooth bottom
   Initial state: Canvas worn (swollen canvas fiber, low quality of rubber, discolored with white, and bad clearness)
   Latter state: Canvas worn and rubber exposed (tooth width narrowed)
8. Missing tooth

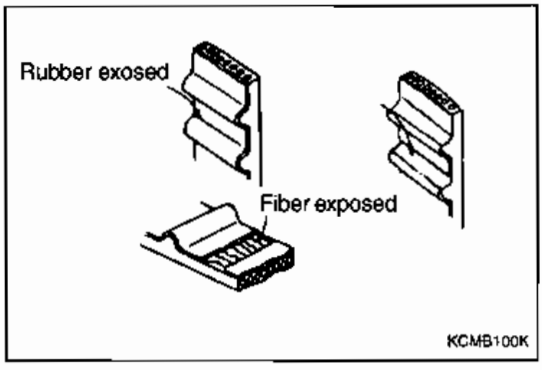

TIMING BELT TENSIONER

1. Check it for smooth rotation and abnormal noise and replace it if required.
2. Check it for clicking sound and rolling and replace it if required.

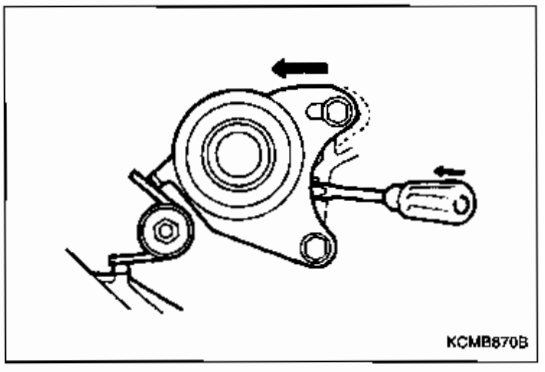

TIMING BELT COVER

1. Check it for deformation and crack and replace it if required.
2. Check the seal for wear and damage and replace the timing belt if required.

INSTALLATION

CRANKSHAFT SPROCKET

1. Mount the crankshaft sprocket to the crankshaft noting the direction of the sprocket as well as the flange.
2. Mount the camshaft sprocket and tighten the flange bolts to specified torque.
3. Be careful of the flange installation direction.

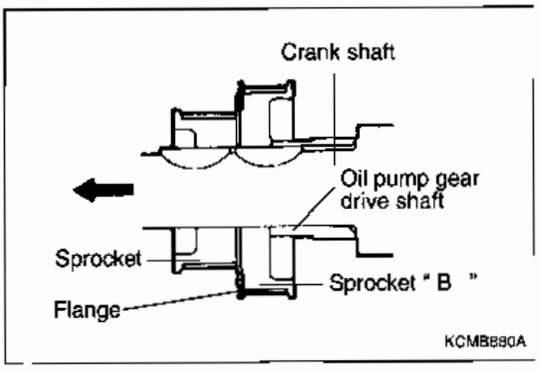

TIMING BELT TENSIONER

1. Install the tensioner, tensioner spring and tensioner spacer.
2. The tensioner moved all the way to the water pump, temporarily tighten bolt.

⚠ ***CAUTION***
When installing, face the short end of tensioner spring toward the water pump.

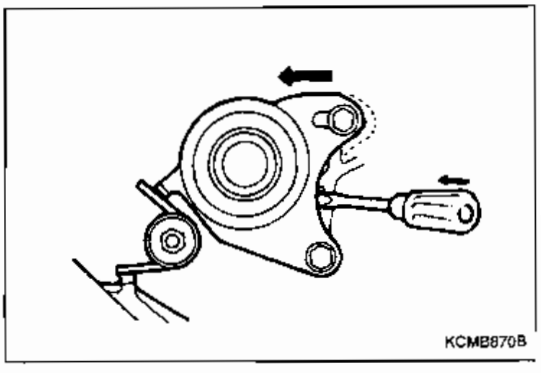

TIMING BELT

1. Correctly line up timing marks on three sprockets.
2. While ensuring that the tension side of timing belt is not slack, install belt onto the crankshaft sprocket, injection pump sprocket, tensioner and camshaft sprocket, in that order.

⚠ ***CAUTION***
- ***When installing the belt onto the injection pump sprocket, keep the sprocket in position, as it tends to turn by itself at the timing mark alignment position.***
- ***If the belt is to be reused, make sure that the arrow mark made during disassembly faces to the correct direction at reassembly.***

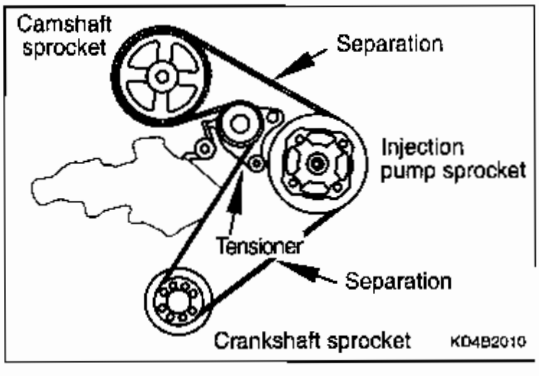

3. Check if all timing marks are aligned correctly.

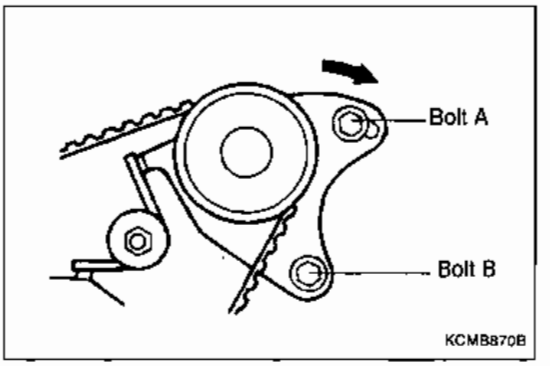

4. Back off tensioner bolt A, that have previously been secured to the water pump side, one to two turns to give tension to the belt using tensioner spring tension.
5. Confirm that the timing belt is correctly engaged with three sprockets.

   ⚠ ***CAUTION***
   Turn crankshaft clockwise by the two teeth of the camshaft sprocket and keep the position.

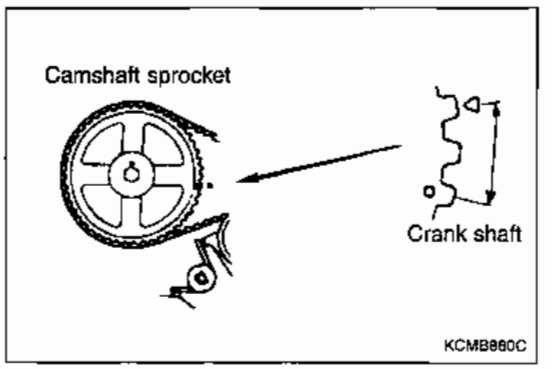

6. Tighten bolt A.
7. Tighten bolt B.

   ⚠ ***CAUTION***
   If the bolt B is tightened first, the tensioner should be turned together, causing an undue tension to be applied to the timing belt.

8. Turn the crankshaft in the direction of backward rotation to line up timing marks.
9. In this condition, ensure that the deflection when the center of belt is pushed by the index finger.

Standard	4 ~ 5 mm

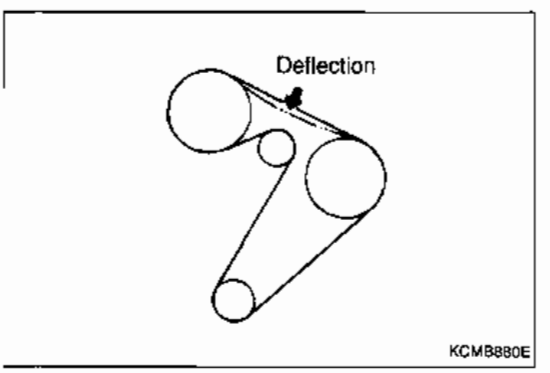

FLANGE INSTALLATION

Note that bolt holes in the flange and those in the injection pump sprocket are offset positioned at one place. When assembling, position the jlange and sprocket as shown.

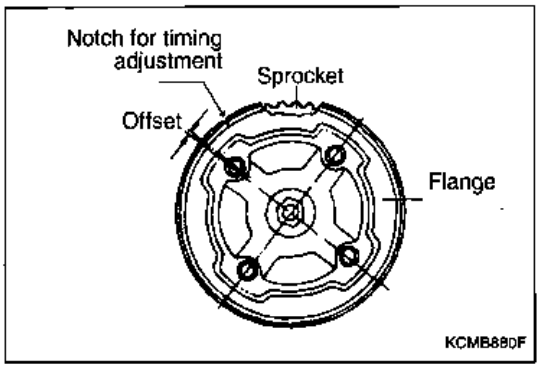

2) TIMING "B"

COMPONENTS

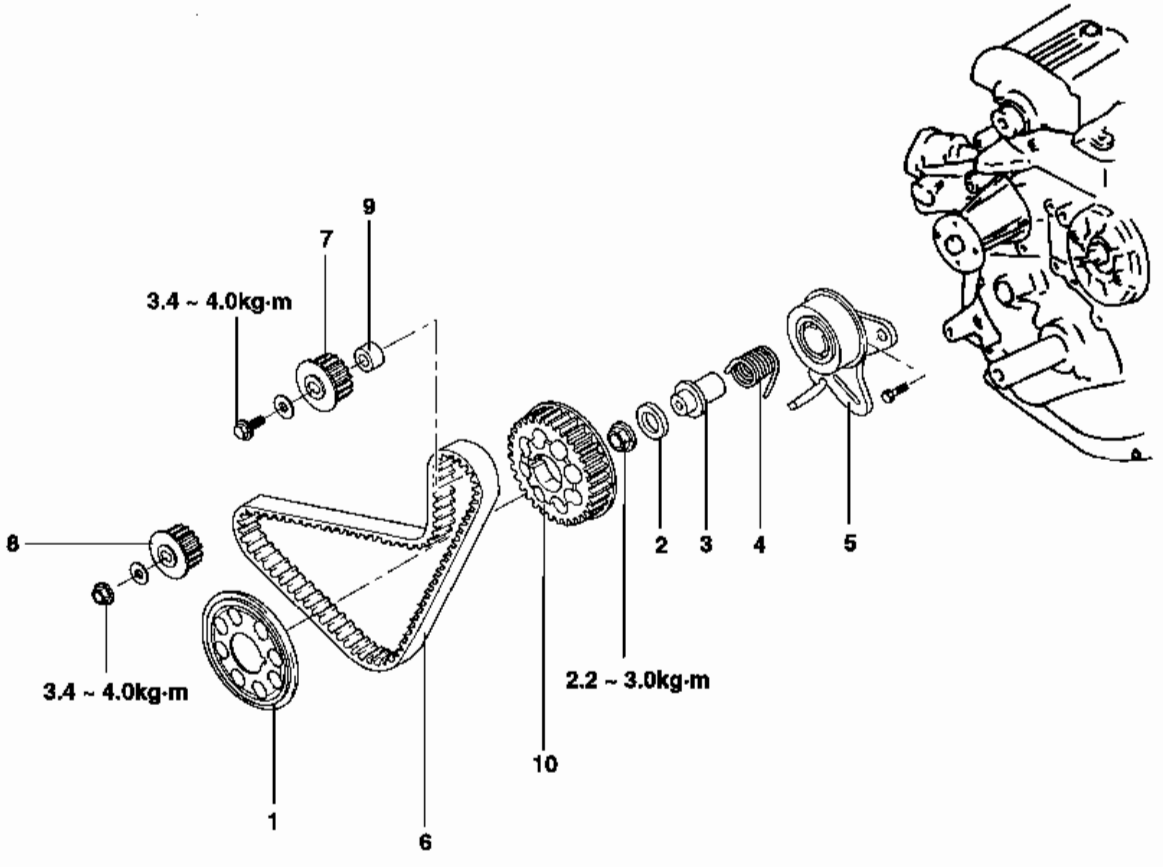

1. Flange
2. Gasket
3. Tensioner spacier
4. Tensioner spring B
5. Timing belt tensioner B
6. Timing belt B
7. Silent shaft sprocket-right
8. Silent shaft sprocket-left
9. Spacier
10. Crank shaft sprocket B

KCMB900A

REMOVAL

TIMING BELT "B"

1. Remove the timing belt.
2. Using chalk or the like, put an arrow on the back of the timing belt "B" to indicate the direction of drive.

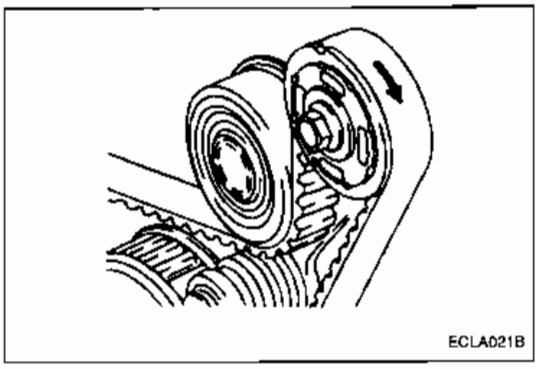

3. Slightly loosen the bolts and nuts securing the tensioner. Then, slide the tensioner toward the water pump and tighten the nuts to secure the tensioner in place temporarily.
4. Remove the timing belt "B".
5. Remove the crankshaft sprocket "B".
6. Remove the two silent shaft sprockets.

SILENT SHAFT SPROKCET(LEFT, RIGHT)

When loosening the nut and bolt for two silent shaft sprockets, be sure to lock the silent shaft as shown.

⚠ ***CAUTION***
Water, oil, or grease on the belt shortens its life drastically. Use special care to ensure that the removed timing belt, sprockets, and tensioner are free from oil and grease.

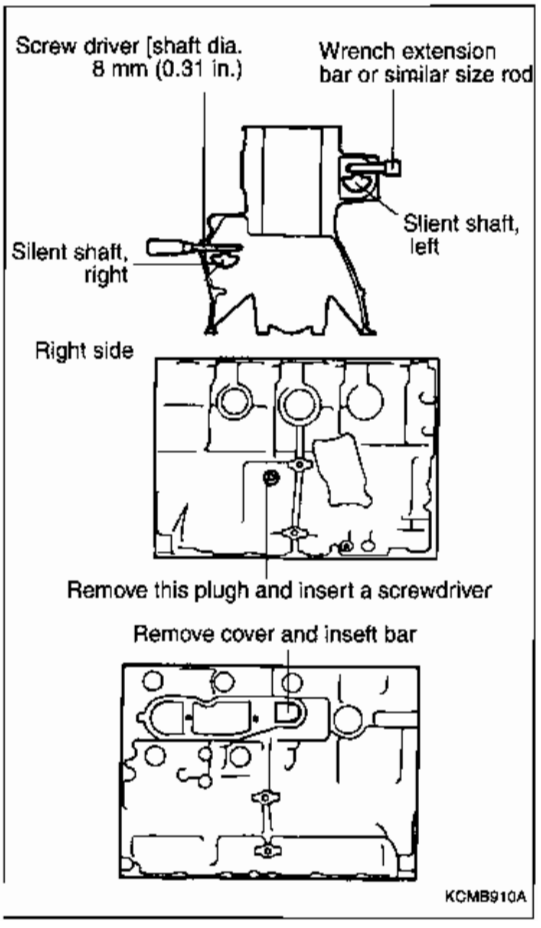

INSTALLATION

1. Mount the crankshaft sprocket "B"to the crankshaft, noting the direction of the sprocket "B".

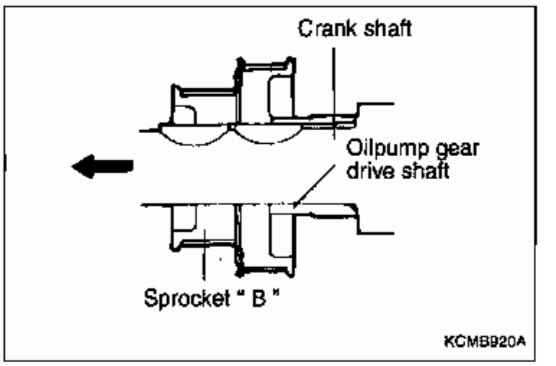

2. The spacer must be installed with its chamfered end facing toward the silent shaft. If the spacer is installed in the wrong direction, damage to oil seal will result.

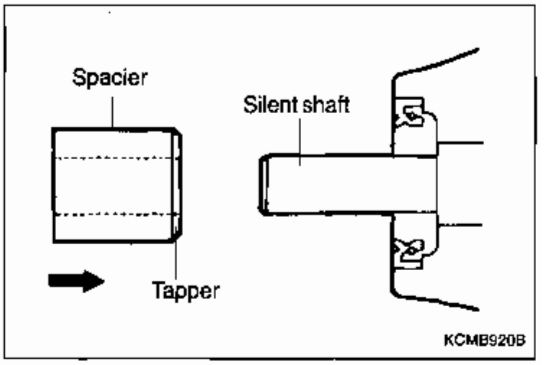

TIMING BELT "B" TENSIONER

1. Install the tensioner spring and spacer, with the tensioner moved all the way to the water pump.
2. Tigh ten the nut. Tighten the bolt not fully put finger tight.

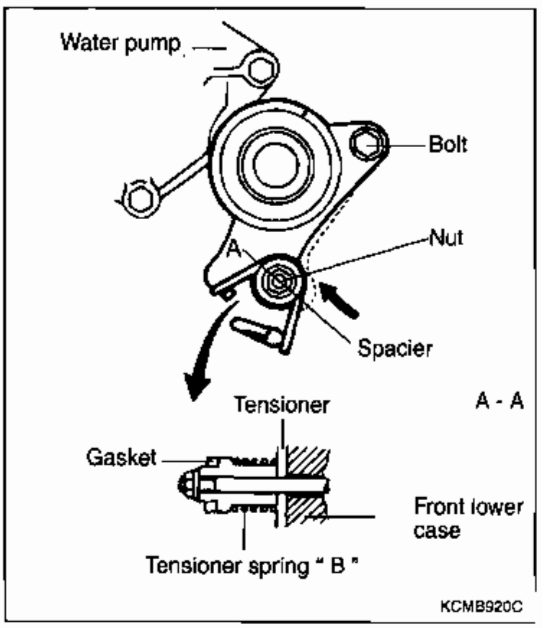

TIMING BELT "B"

1. Line up timing marks on the crankshaft sprocket B, and right and left silent shaft sprockets.
2. With the timing belt B installed, ensure that its tension side is not slack.

   ⚠ ***CAUTION***
   If the belt is to be reused, make sure that the arrow mark made during disassembly faces to the correct direction at reinstallation.

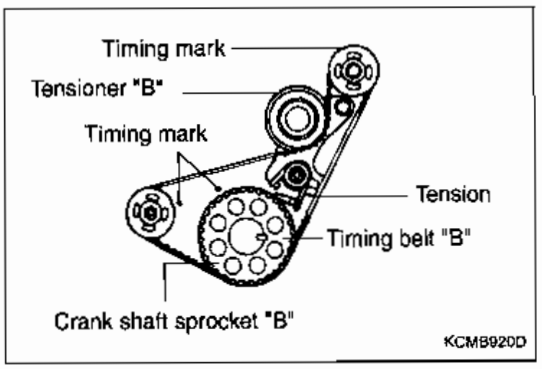

3. With the tension side of timing belt B kept tight by pushing the slack side (indicated by A in illustration) with a finger, make sure that the timing marks are properly aligned with each other.

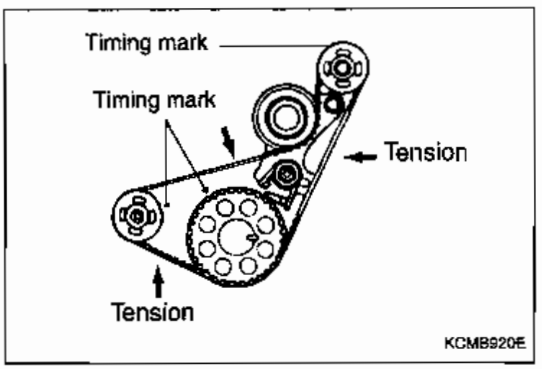

4. Back off tensioner B nut, that have previously been secured to the water pump side, one to two turns to give tension to the belt using tensioner spring tension.
5. First tighten the timing belt "B" tensioner mounting nut and then the bolt.

   ⚠ ***CAUTION***
   If the bolt is tightened first, the tension B should be turned together, resulting in reduced timing belt B tension.

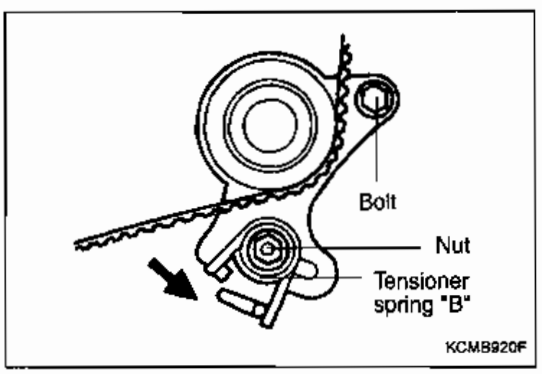

6. Ensure that the deflection is 4 to 5 mm (0.0394 to 0.1969 in.) when the belt is pushed by the index finger at the position indicated by and arrow.

Belt deflection	4 – 5 mm

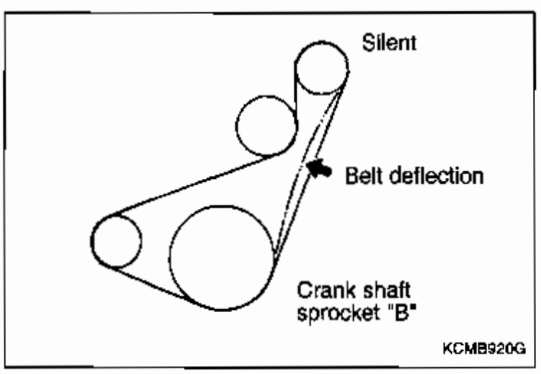

3. FRONT CASE

1) FRONT CASE, SLIENT SHAFT, OIL PAN

COMPONENTS

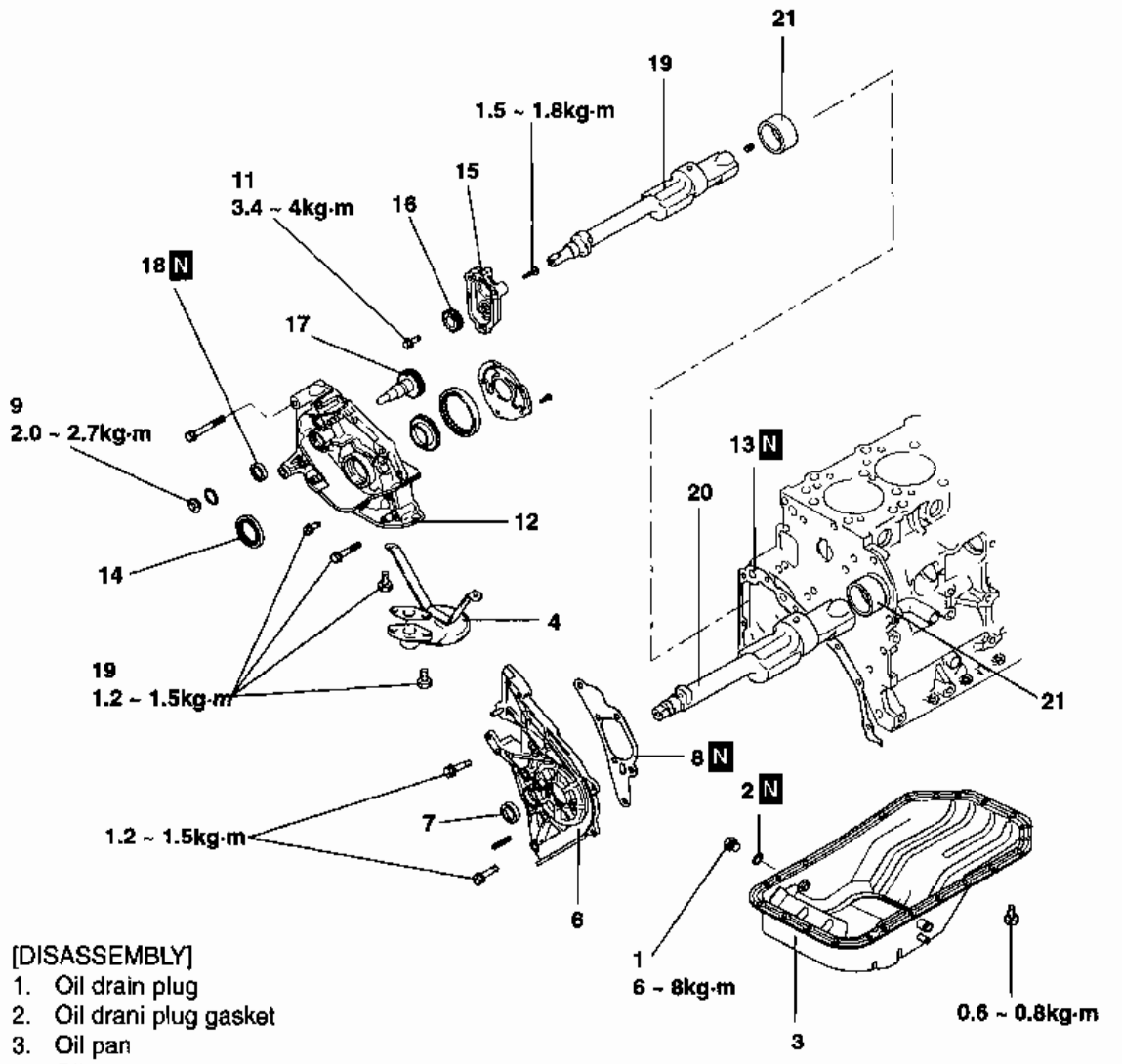

[DISASSEMBLY]
1. Oil drain plug
2. Oil drani plug gasket
3. Oil pan
4. Oil screen
5. Oil screen gasket
6. Front upper case
7. Oil seal
8. Front upper case gasket
9. Plug Cap
10. O-ring
11. Flange bolt
12. Flange lower case
13. Flange lower case gasket
14. Front oil seal
15. Silent shaft gear cover
16. Silent shaft driven gear
17. Silent shaft driven gear
18. Oil seal
19. Silent shaft, right
20. Silent shaft, left
21. Bearing, rear

[Remarks]
Assembly is the reverse of disassembly.
Do not reuse N marking parts.

KCMB150A

REMOVAL

OIL PAN

Remove the oil pan by tapping the oil pan bottom edge or drain plug with a soft hammer.

⚠ ***CAUTION***
Do not insert a chisel or screwdriver between the oil pan flange and cylinder block to remove the oil pan. It may deform the oil pan flange surface.

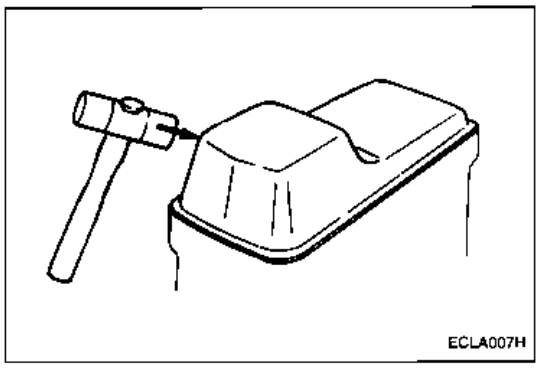

FLANGE BOLT REMOVAL

1. Remove the plug on the right side of the cylinder block.

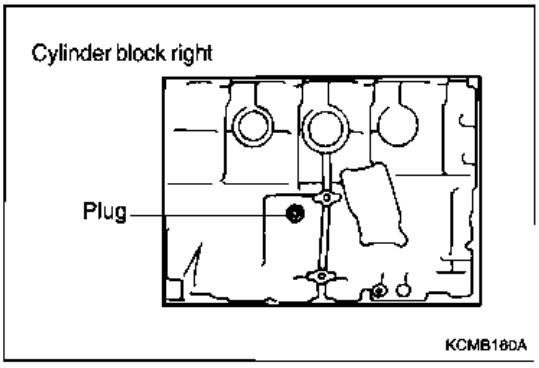

2. Insert a screwdriver (cross slotted) into the plug hole not to turn the silent shaft.
3. Remove the flange bolt.

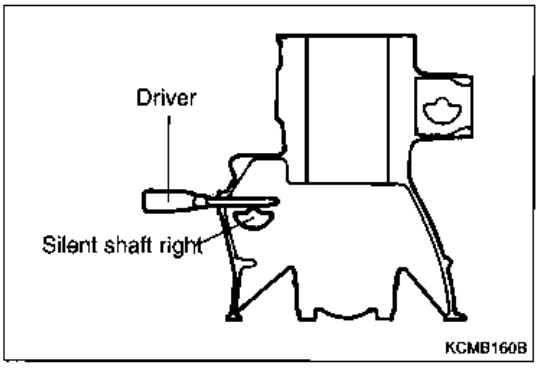

INSPECTION

SILENT SHAFT

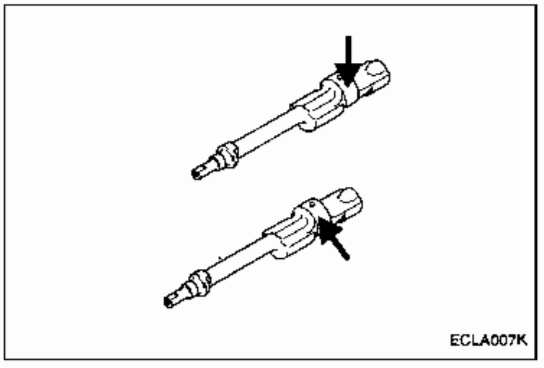

1. The oil holes must be free from clogging.
2. Check journal for seizure, damage, and contact with the bearing. If defects are evident, replace the silent shaft, bearing, or front case assembly.
3. Check the silent shaft for oil clearance. If wear is excessive, replace the silent shaft bearing, silent shaft, or front case assembly.

STANDARD VALUE

Front left	0.02 ~ 0.6 mm
Front right	0.02 ~ 0.05 mm
Rear	0.05 ~ 0.09 mm

FRONT UPPER CASE, FRONT LOWER CASE

Check them for damage and crack.
Replace them if required.

OIL PAN

Check the gasket surface for deformation and replace it if required.

REPLACEMENT

SILENT SHAFT

1. Use Bearing Installer Stopper (special tool) only for removal and reinstallation of the right bearing.

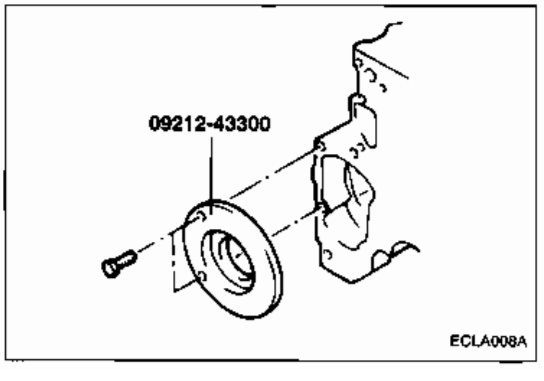

2. Using Bearing Installer Stopper and Silent Shaft Bearing Puller (09212 - 43300, 09212 - 43100), remove two rear bearings from the cylinder block.

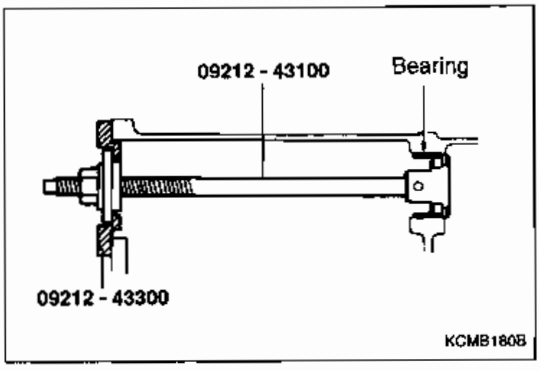

3. Using Bearing Installer Stopper and Silent Shaft Bearing Puller (09212 - 43300, 09212 - 43100), remove two rear bearings from the cylinder block.

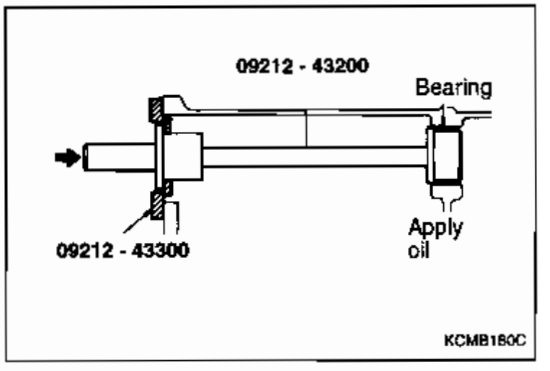

4. When press-fitting the right bearing, align the bearing oil hole with the cylinder block oil hole.

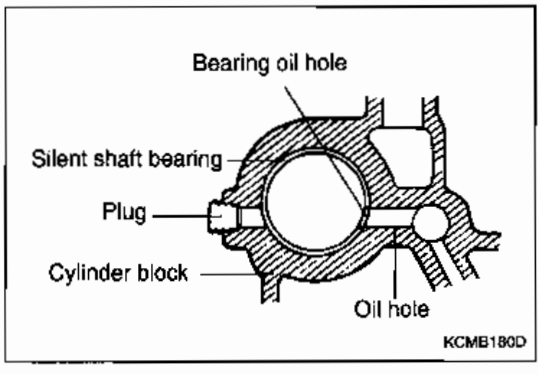

INSTALLATION

OIL SEAL

Install special tools in drive gear and apply to engine oil to drive gear shaft.

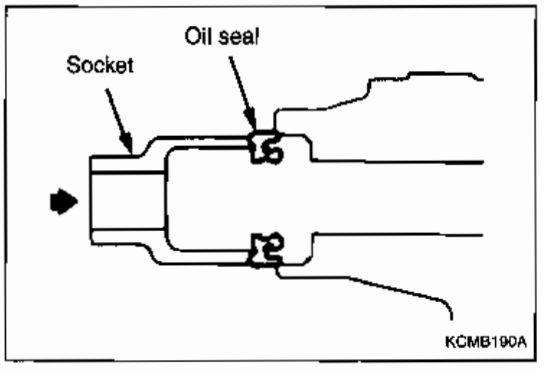

SILENT SHAFT GEAR

1. Apply engine oil to the gear.
2. Align the mating marks on the silent shaft drive gear and driven gear and assemble them to the front lower case

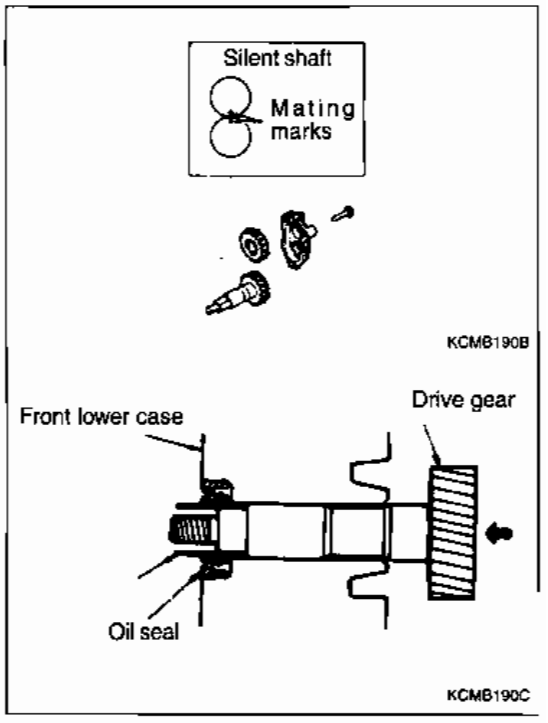

FRONT LOWER CASE

When tightening the bolts, be sure to secure the silent shaft in position.

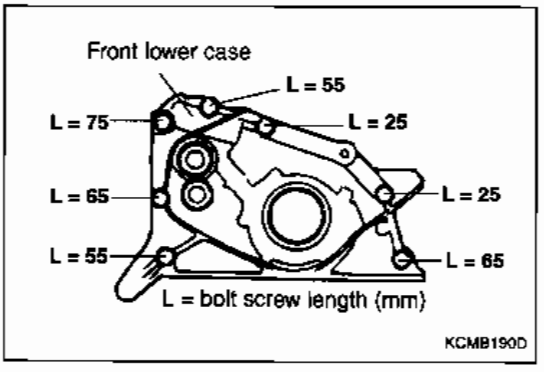

FRONT OIL SEAL

1. Install the special tool guide to the crankshaft and apply engine oil to the outer surrounding.
2. Using the special tool, assemble the front oil seal to the case.

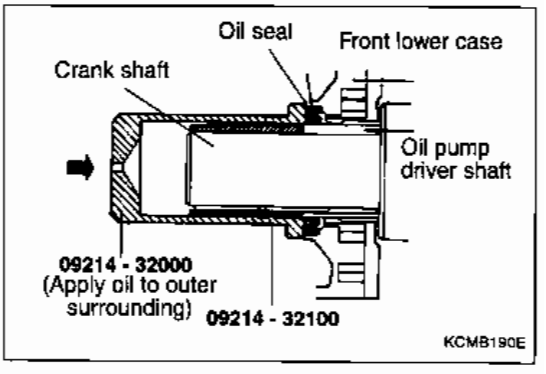

FLANGE BOLT

1. Insert a screwdriver (cross slotted) into the plug hole not to turn the silent shaft(right).
2. Assemble the flange bolt and tighten it to the specified torque.

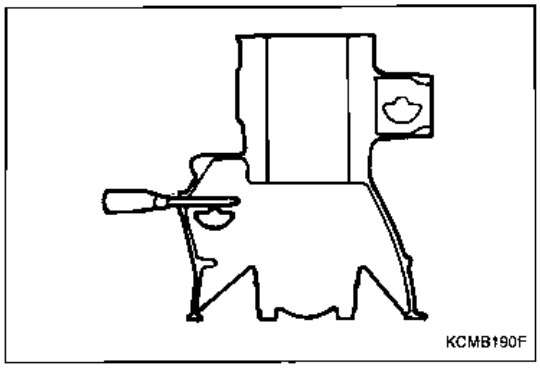

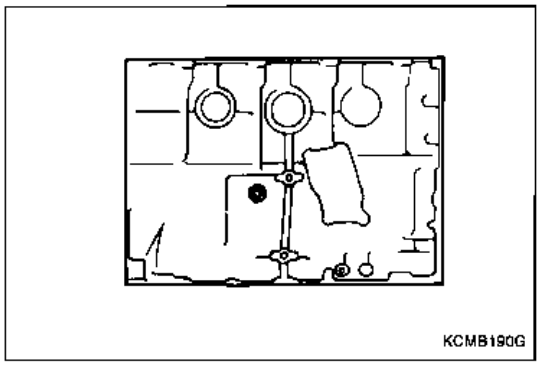

OIL PAN

1. Remove the sealant attached in the cylinder block and oil pan gasket surface.
2. Apply sealant to the oil pan flange to the thickness of 4mm.
3. After applying sealant, assemble the oil pan and tighten the bolt to the specified torque in 15 minutes.

Tightening torque	0.6 ~ 0.8 kg·m

4. MAIN MOVING SYSTEM

1) CRANK SHAFT & FLY WHEEL

COMPONENT

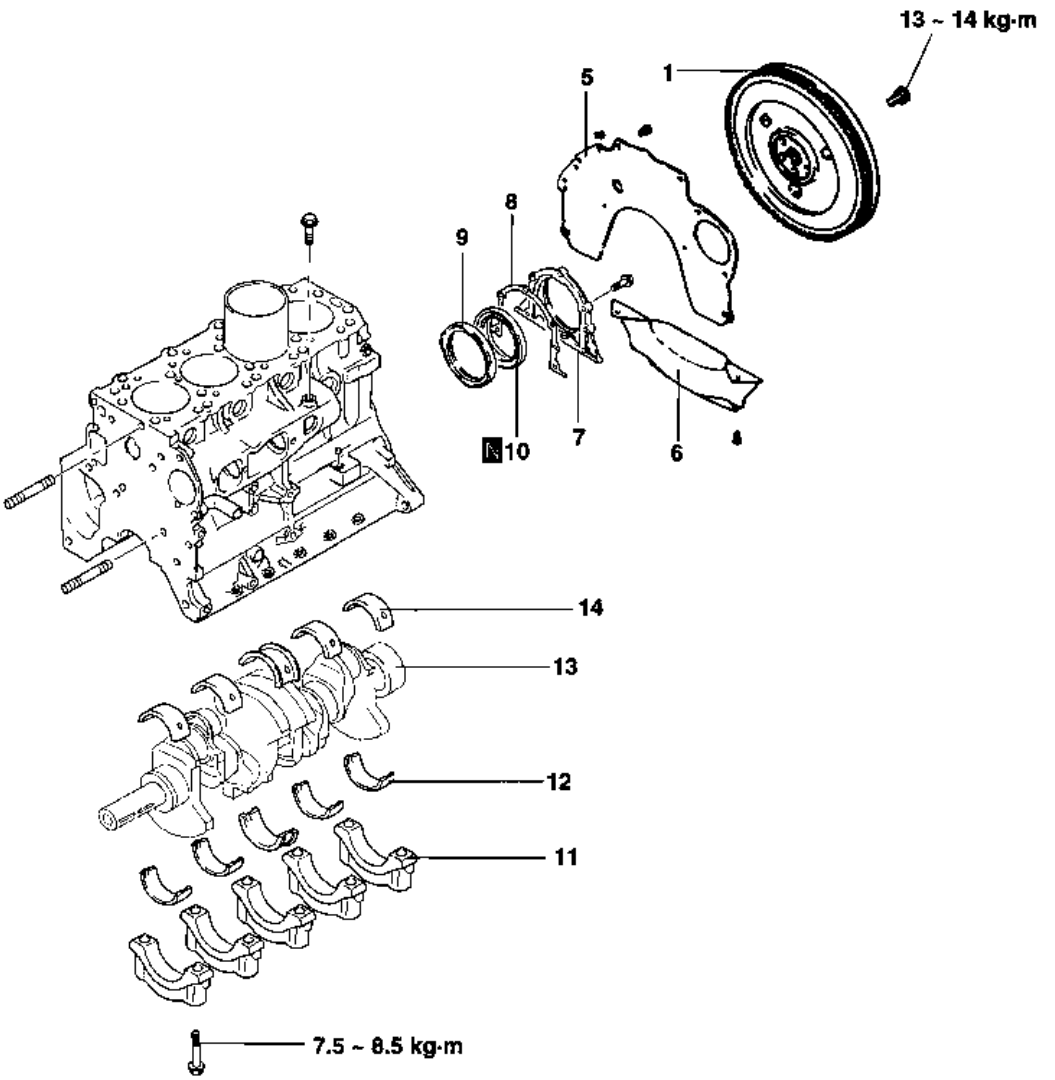

1. Fly wheel assembly
2. Rar plate
3. Bell housing cover
4. Oil sela case
5. Gasket
6. Oil separator
7. Rear oil seal
8. Bearing cap
9. Crank shaft bearing-Lower
10. Crank shaft
11. Crank shaft bearing-Upper

[Remarks]

(1) Assembly is the reverse of disassembly

(2) Do not reuse N marking parts.

KCMB200A

INSPECTION

CRANKSHAFT

1. Visually inspect the journals and pins for damage and replace them if required.
2. Measure the journal O.D. and main bearing I.D. and if the clear ance exceeds the limit, replace the main bearing (and crank shaft if required).
   Or, grind the crankshaft to undersize and replace it with the undersize main bearing.

Standard	0.02 ~ 0.05 mm
Limit	0.01 mm

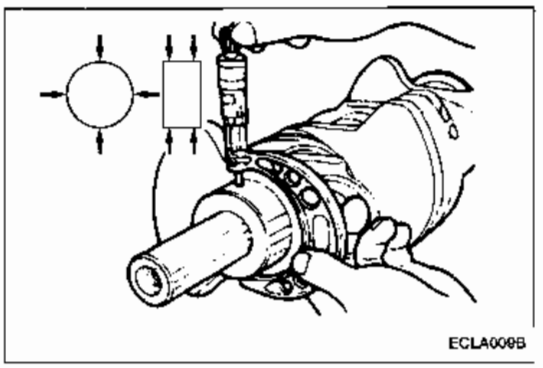

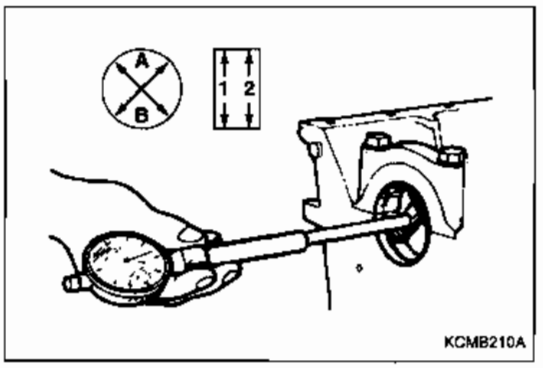

3. When grinding the crankshaft to undersize, ensure correct fillet radius dimensions in journals and pins.

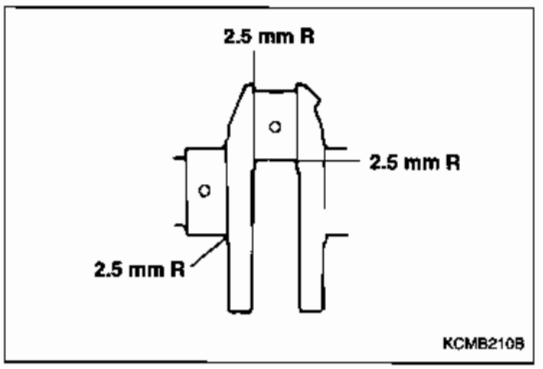

CRANKSHAFT OIL CLEARANCE (PLASTIGAGE METHOD)

1. Wipe crankshaft O.D. and bearing I.D. clean of oil.
2. Install the crankshaft.
3. Put a strip of Plastigage lengthwise in the center of the journal.

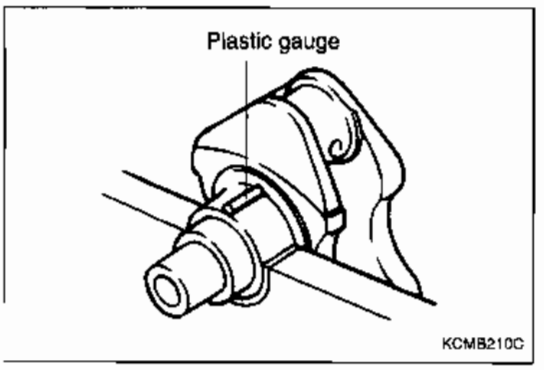

4. Replace the main bearing cap carefully and tighten bolts to specification.
5. Remove bolts and carefully remove the main bearing cap.
6. Using the scale printed on the bag of plastigage, measure the amount the Plastigage has been flattened (the widest point).

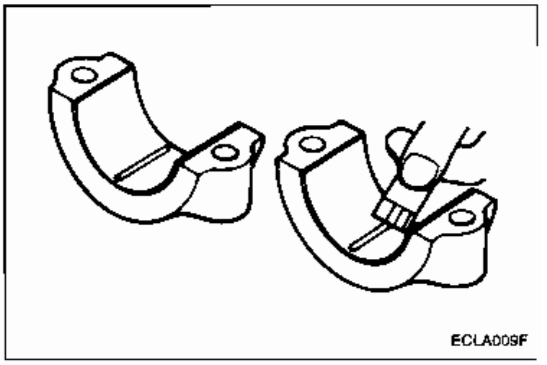

CRANKSHAFT FRONT AND REAR OIL SEALS

1. Wear and damage in oil seal lips.
2. Deteriorated or hardened rubber.
3. Cracks or damage on oil seal case.

RING GEAR

1. If the ring gear teeth are worn, damaged, or broken, replace the ring gear.
2. If the teeth are damaged or broken, check the starting motor pinion.
3. To remove the ring gear for replacement, tap its outer rim one place after another. Heating the gear makes it impossible to remove. To install the ring gear onto the flywheel, heat it up to 260-280°C (500-536°C) : it is a shrink fit in the flywheel.

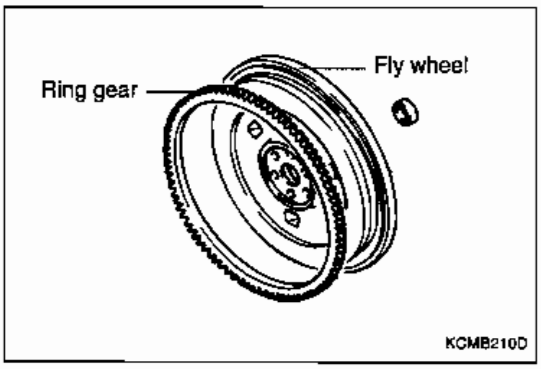

FLYWHEEL

1. Visually inspect the flywheel clutch disc surface for wear and damage and replace it if required
2. If the clutch disc surface rolling exceeds the limit, replace it.

Limit	0.13 mm

DRIVE PLATE (AUTOMATIC TRANSAXLE)

Check the drive plate for deformation, damage and crack and replace it if required.

INSTALLATION

1. Install the upper crankshaft bearing to the cylinder block. There is oil hole in the upper crankshaft bearing.
2. Install the lower crankshaft bearings to each bearing cap and apply engine oil to the bearing surface.

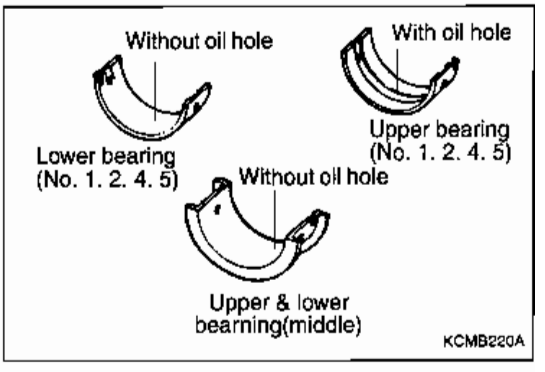

BEARING GAP

1. Install the main bearing to the cylinder block. Ensure the correct cap number and arrow mark direction.

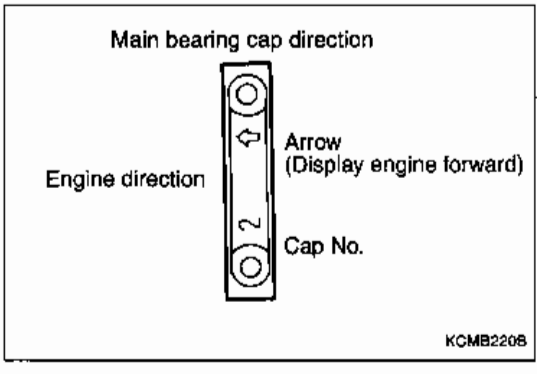

2. Check to ensure that the crankshaft turns smoothly and there is an adequate end play.

Standard	0.05 ~ 0.18 mm
Limit	0.25 mm

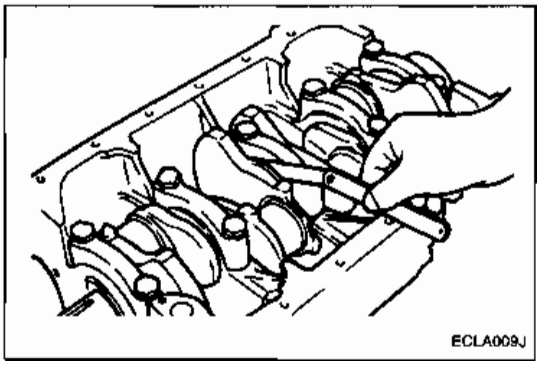

OIL SEAL CASE

Using special tool, press-fit a new crankshaft rear oil seal into the oil seal case.

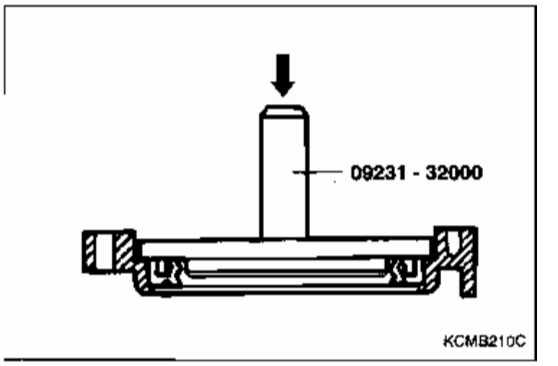

OIL SEPARATOR

Push oil separator into the oil seal case. Make sure that the oil hole in the separator comes at the bottom (indicated by an arrow in illustration.)

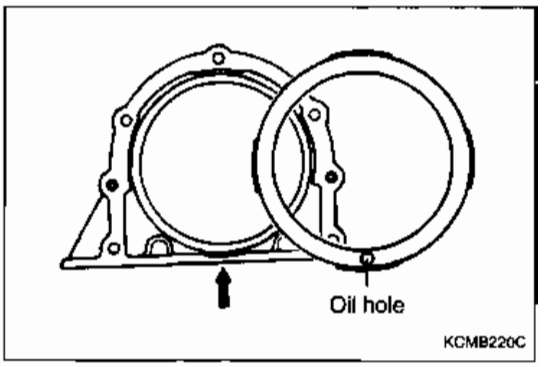

2) PISTON

COMPONENTS

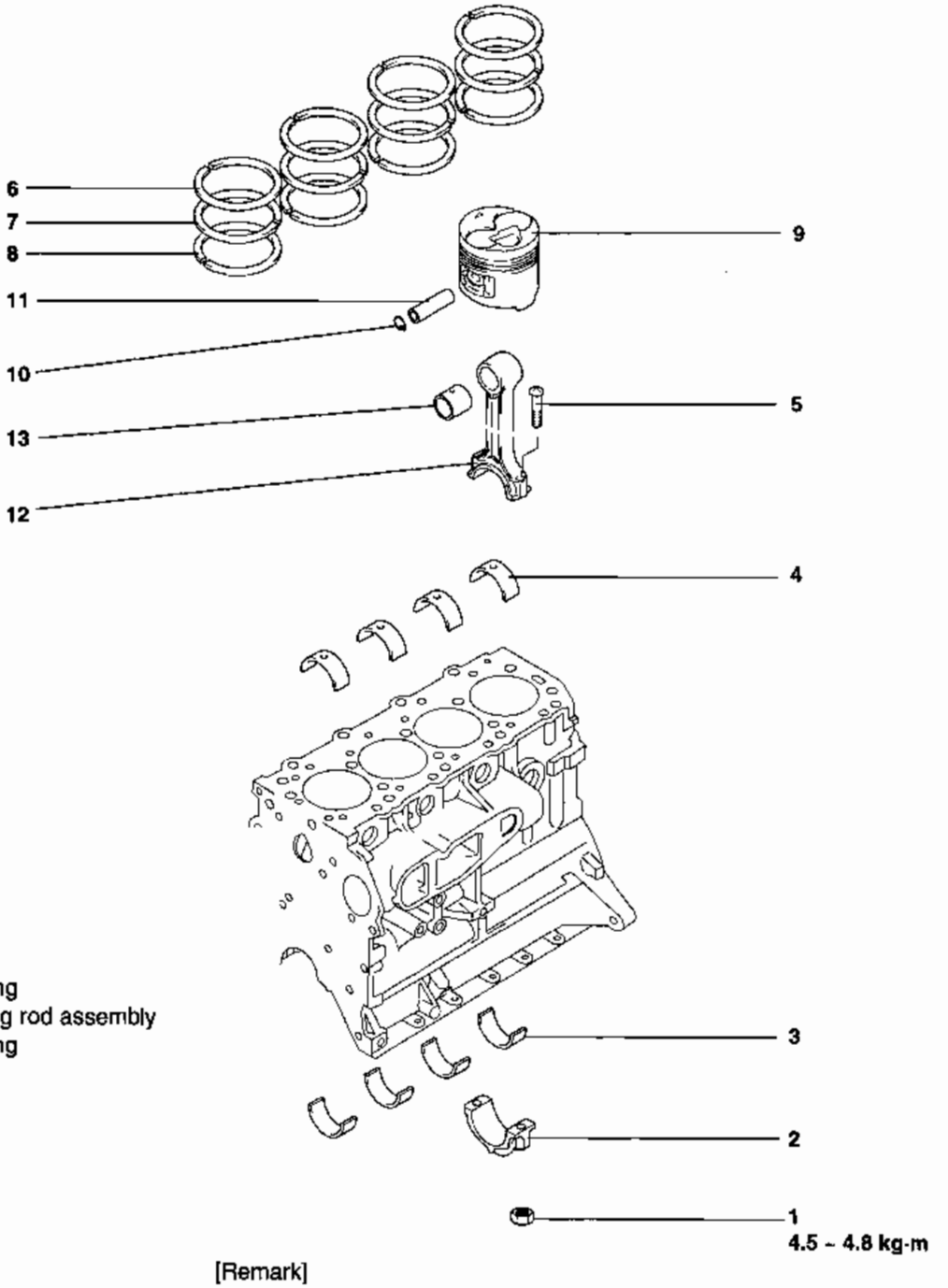

[DISASSEMBLY]
1. Nut
2. Connect rod cap
3. Connect rod bearing
4. Piston & connecting rod assembly
5. Connect rod bearing
6. Bolt
7. Piston ring No.1
8. Piston ring No.2
9. Oil ring
10. Piston
11. Snapring
12. Piston rod
13. Connect rod
14. Bushing

[Remark]
(1) Assembly is the reverse of disassembly

KCMB250A

INSPECTION

PISTON

1. Check each piston for scuffing, scoring, wear and other defects. Replace any piston that is defective.
2. Check that the piston pin fits in the piston pin hole.

   ⚠ ***CAUTION***
   Replace the piston and piston pin as an assembly.

3. Replace any piston and pin assembly that is defective.
4. The piston pin must be smoothly pressed by hand into the pin hole (at room temperature).

PISTON RING

1. Check each piston ring for breakage, damage and abnormal wear. Replace the defective rings.
2. When the piston requires replacement, its ring should also be replaced.

Item		TC	NA
Standard	No.1	0.056 ~ 0.076	0.03 ~ 0.07
	No.2	0.046 ~ 0.066	0.08 ~ 0.12
	OIL	0.02 ~ 0.065	0.02 ~ 0.065
imit	No.1	0.15	
	No.2	0.15	
	OIL	0.1	

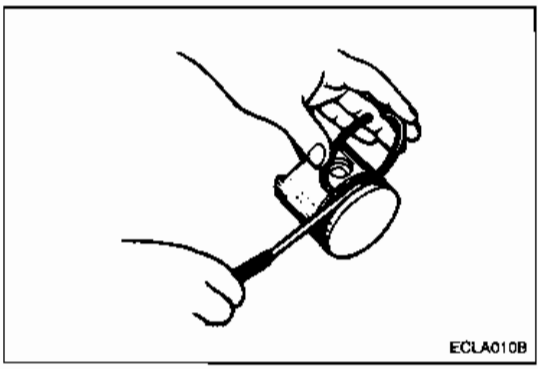

3. Measure the clearance between piston ring and ring home.

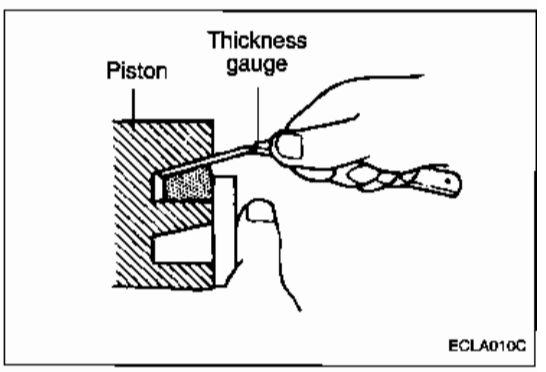

4. Place a piston ring in the cylinder bore and set it square by pushing it down with piston.

Item		TC	NA
Standard	No.1	0.30 ~ 0.50	0.25 ~ 0.40
	No.2	0.41 ~ 0.54	0.45 ~ 0.60
	OIL	0.25 ~ 0.45	0.20 ~ 0.40
Limit		0.8	

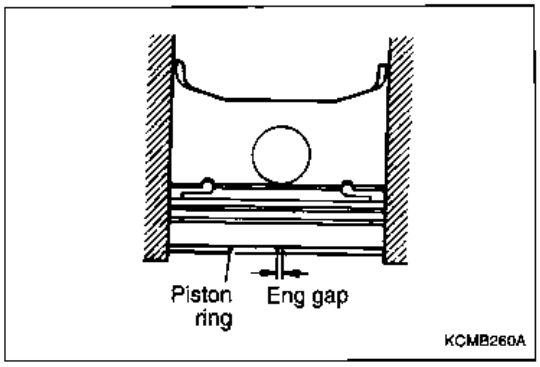

CONNECTING ROD BEARING

1. Check the bearing surfaces for uneven contact pattern, streaks, scratches, and seizure. If defects are evident, replace. If the surfaces are seriously nicked and seized, check also the crankshaft. If the crankshaft is also damaged, replace the crankshaft or grind to undersize for reuse.

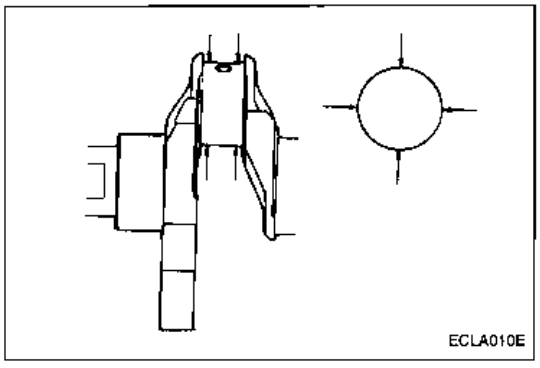

2. Measure the connecting rod bearing I.D. and crankshaft pin O.D. If the clearance (oil clearance) exceeds the limit, replace the bearing and, if necessary, the crankshaft. Or, grind the crankshaft to an undersize and, at the same time, replace the bearing with an undersize.

Standard	0.02 ~ 0.05 mm
Limit	0.1 mm

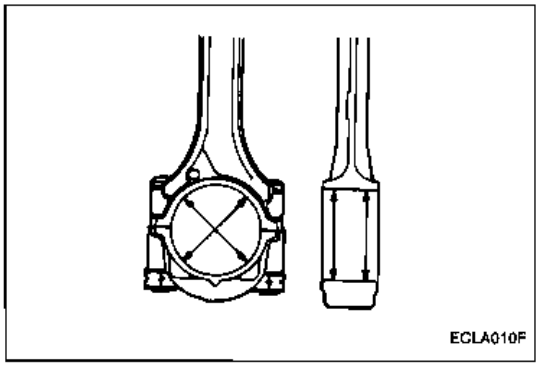

CONNECTING ROD BUSHING

1. Pull out the bushing using the special tool.

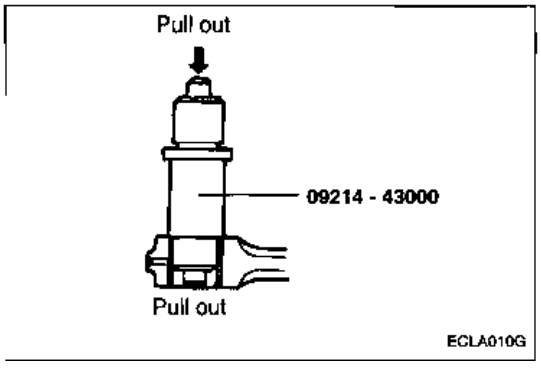

2.. Press-fit the bushing using the special tool.
At this time, align the busing with connecting rod small end oil hole.

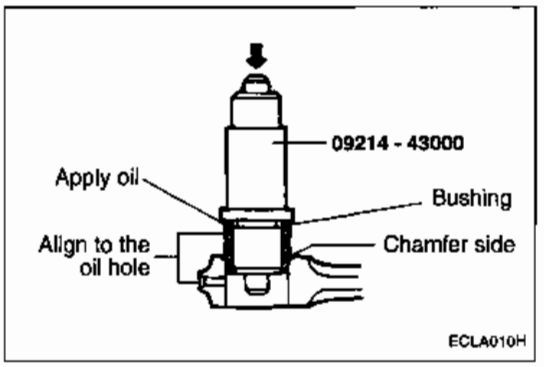

3. Adjust the busing inner diameter within the standard values.

Standard	29.015 ~ 29.025 mm

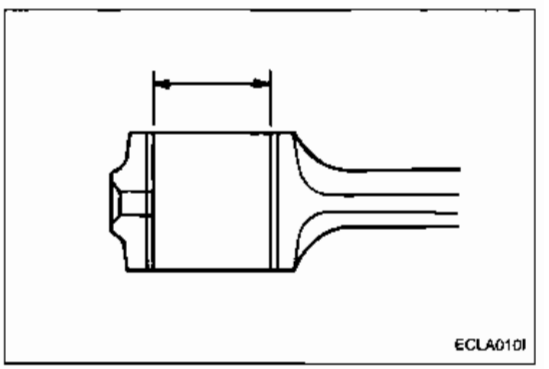

⚠ ***CAUTION***

1. Insert the piston pin, following the front mark.

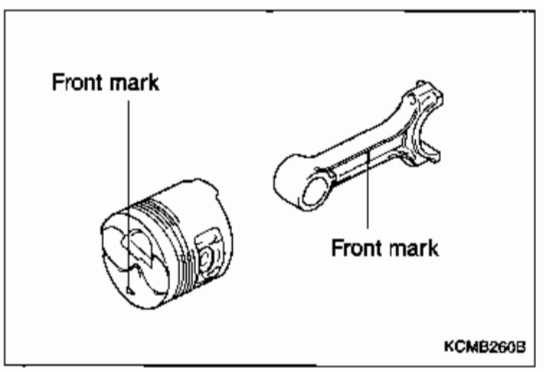

2. Install the snap ring in the following direction.

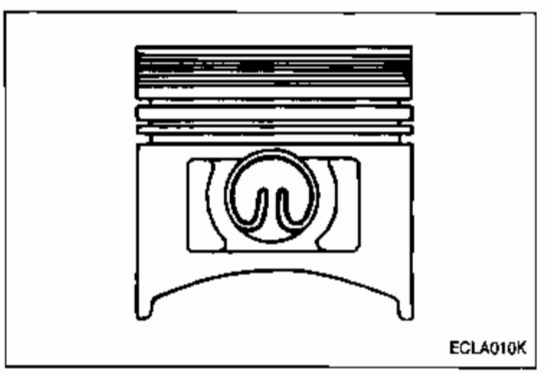

INSTALLATION

PISTON RING INSTALLATION

1. Install the oil ring expander and oil ring to the piston.
2. Then, install No.2 piston ring and No.1 piston ring, in that order. Make sure that the ring side, on which manufacturer and size marks are stamped, faces to the piston crown.

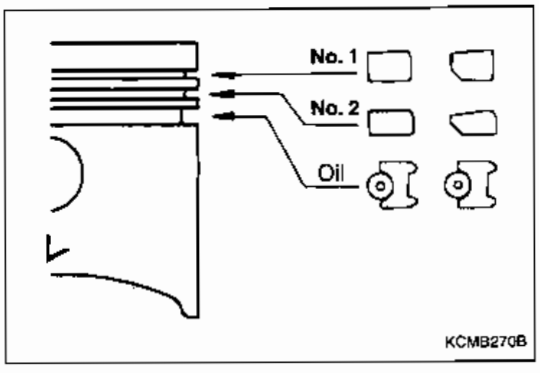

PISTON & CONNECTING ROD ASSEMBLY

1. Apply engine oil to the piston surface, piston ring and oil ring.
2. Adjust gap between the piston ring and oil ring as shown in the illustration.

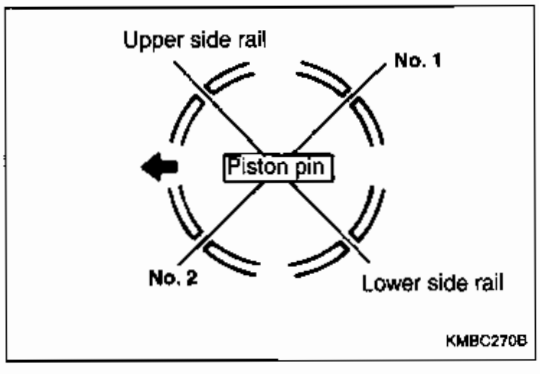

3. Insert the piston and connecting rod assembly from above the top of cylinder. Ensure that the front mark on piston crown and that (ID mark) on the connecting rod face toward the front of engine (to the crank pulley side).
4. Clamp firm the piston rings with the ring band and install the piston assembly into cylinder. Do not strike it hard into the piston, as broken piston ring or damaged crank pin could result.

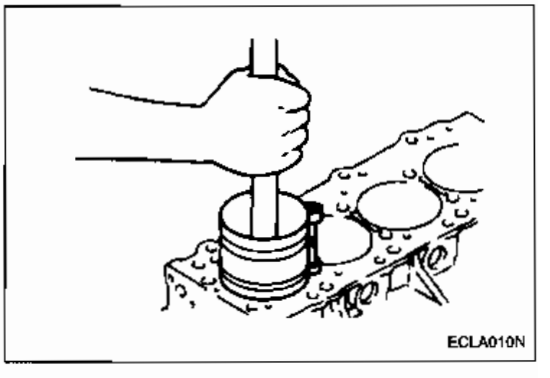

5. When assembling, align the bearing cap with the connecting rod.
   If parts are new ones, align notches in the same direction.
6. Make sure the clearance of connecting rod big end side.

Standard	0.10 ~ 0.25 mm
Limit	0.4 mm

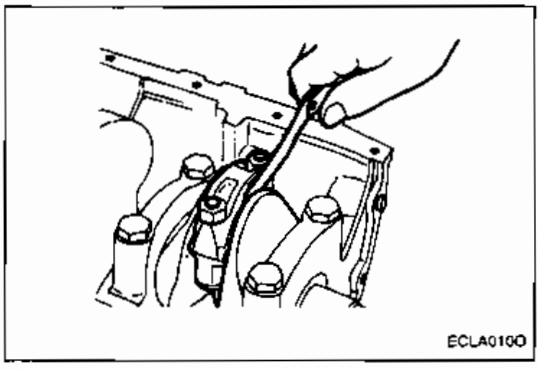

5. CYLINDER BLOCK

1) CYLINDER BLOCK

COMPONENTS

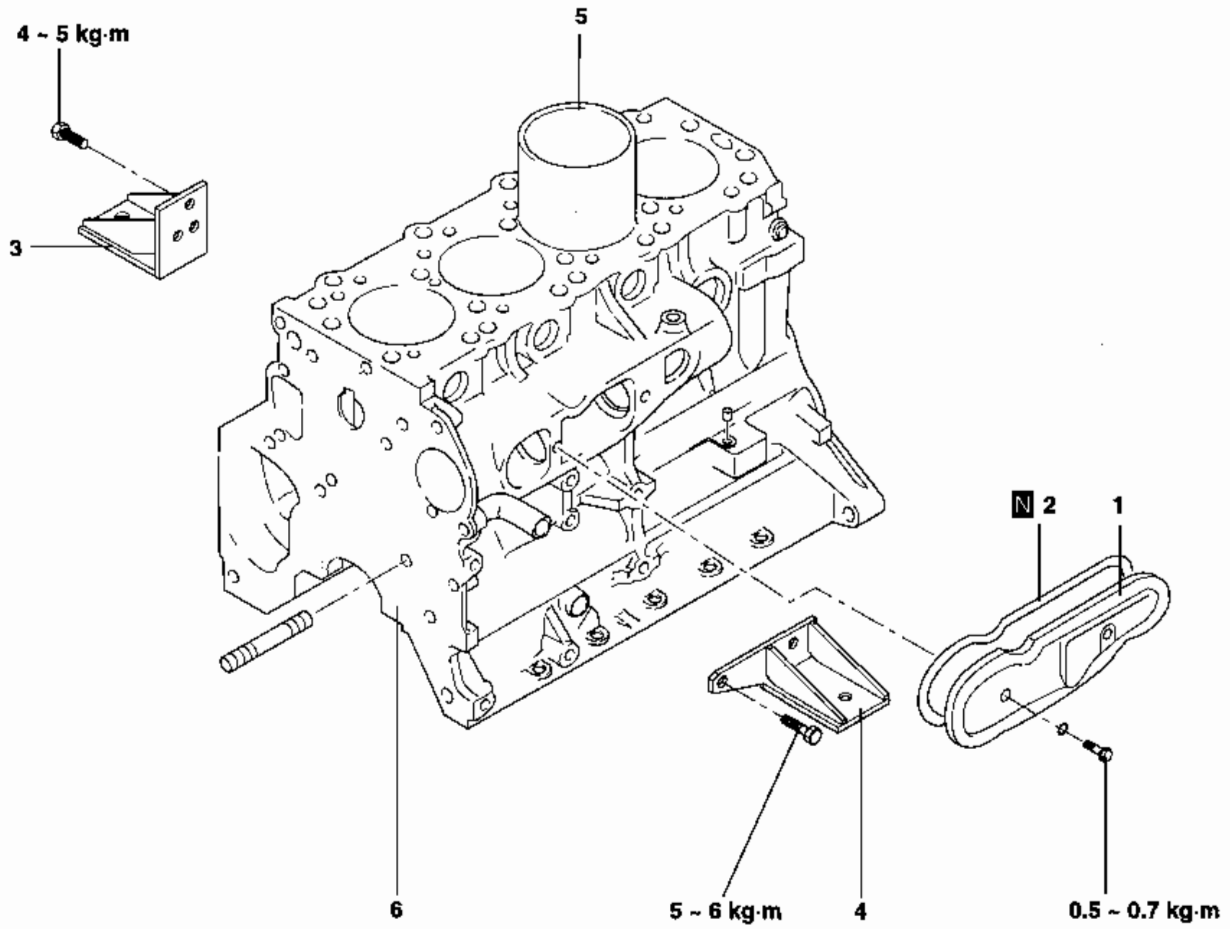

[DISASSEMBLY]
1. Cover
2. Packing
3. Engine bracket, right
4. Engine bracket, left
5. Cylinder sleeve
6. Cylinder block

[Remarks]
(1) Assembly is the reverse of disassembly
(2) Do not reuse N marking parts

KCMB030A

INSPECTION

⚠ ***CAUTION***

- ***Before inspection and repair, clean parts to remove dirt, oil, carbon, deposits, and scale.***
- ***Before cleaning the cylinder block, be sure to check for evidences of water leaks and damage.***
- ***Romove contaminants from oil holes with compressed air and, at the same time, make sure that they are not blocked.***

CYLINDER BLOCK

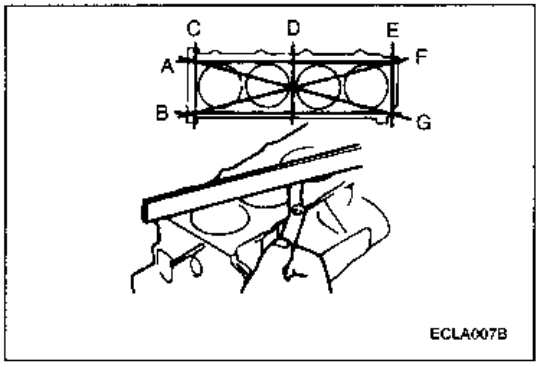

1. Check for scratches, rust, and corrosion. Use also a flaw - detecting agent for the check. If defects are evident, correct or replace.
2. Using a straightedge and thickness gauge, check the cylinder block top surface for flatness. Lay the straightedge longways and crossways as indicated by A, B,... in illustration. If flatness is not within the limit, replace the cylinder block. At measurement, ensure that the cylinder block top surface is free from any traces of gasket material.

Standard	0.05 mm
Limit	0.1 mm

3. Check cylinder wall for scratches and seizure. If defects are evident, correct (to oversize) or replace.

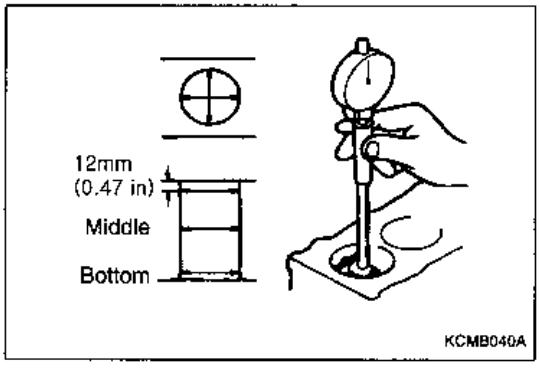

4. Using cylinder gauge, measure the cylinder bore. If it wears out excessively, bore the cylinder to oversize and replace the piston and piston rings. Measurement points are as shown.

Standard	91.10 ~ 91.13 mm

BORING OF CYLINDER

1. Using the maximum cylinder bore as a basis, determine the oversize piston to be used.

   There are four oversize pistons available :

Size	Identification mark
0.25 mm(0.01 in.) O.S.	0.25
0.50 mm(0.02 in.) O.S.	0.50
0.75 mm(0.03 in.) O.S.	0.75
1.00 mm(0.04 in.) O.S.	1.00

   ⚠ ***CAUTION***
   Sizes are marked on the pistons.

2. Based on the piston O.D. measured, calculate the boring dimension.

   - **Boring dimension**
   Piston O.D. + 0.04 to 0.06 mm
   (piston to cylinder clearance) - 0.02 mm (0.0008 in.)
   (honing margin).

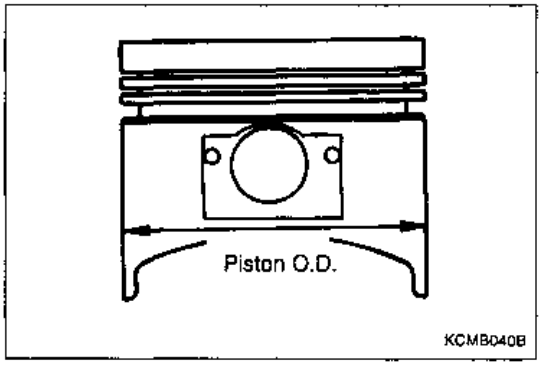

4. Bore cylinders to obtain the calculated boring dimension.

   ⚠ ***CAUTION***
   To prevent thermal distortion due to temperature rise during boring operation, bore cylinders in the sequence of No. 2, 4, 1 and 3.

5. The cylinders must be honed to finish dimension.

6. Check clearance between piston and cylinder.

Clearance	TC	NA
	0.02 ~ 0.08 mm	0.03 ~ 0.05 mm

   ⚠ ***CAUTION***
   1. ***When boring cylinders, finish all of four cylinders to the same oversize.***
   2. ***Don't bore only one cylinder to oversize.***

2) REPLACING CYLINER SLEEVE

REMOVAL

1. Fix the cylinder block with a boring machine before centering. Centering should be done in the lower part of the cylinder sleeve where has little abnormal wear.
2. Bore the sleeve until the thickness is 0.5mm.

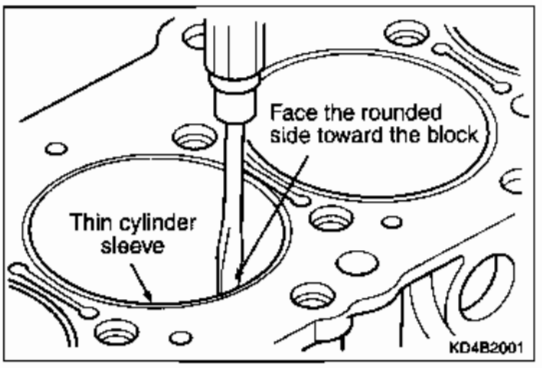

3. Insert the processed screwdriver as shown in the illustration between the cylinder sleeve and cylinder block and remove the cylinder sleeve by tapping on the screwdriver slightly. Be careful not to damage the cylinder block wall.

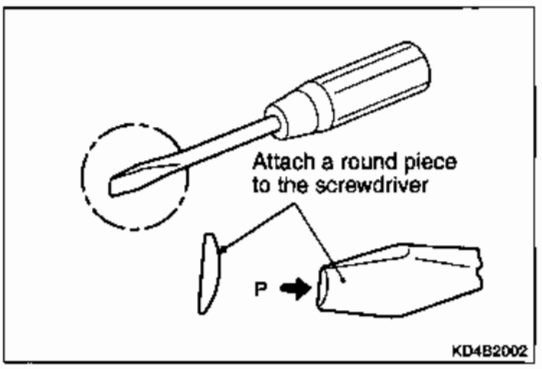

INSPECTION

1. After removing the cylinder sleeve, inspect the cylinder block sleeve hole surface.
2. If there are damages, scuffing, abnormal wear and other defects, bore the cylinder block sleeve hole to oversize.

3. Measure the cylinder sleeve O.D. and cylinder block sleeve hole I.D. with a gauge placed as shown in the illustration. Measure D1, D2 and D3 in the directions of X and Y and if the average value is below 0.12mm, bore the sleeve hole to 0. 5mm oversize and press-fit the oversized sleeve into the sleeve hole.

   ⚠ ***CAUTION***
   Be sure when boring the cylinder, all sleeves should be removed from all cylinders not to make mistakes during rounding.

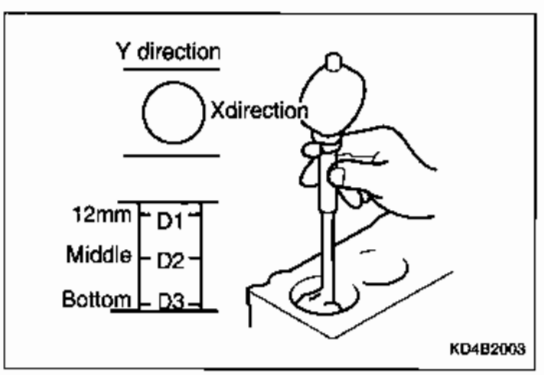

PRESS-FIT

1. Without boring cylinder block sleeve hole

   1) Apply press oil to the cylinder block sleeve hole surface and sleeve outer surface.

   2) Put a flat rounded plate on the sleeve top end and press-fit it with a hydraulic press.

Press-fit load	2200kg or more

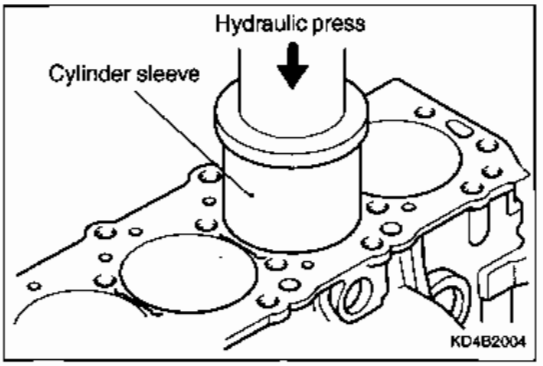

   3) Press-fit the sleeve until the sleeve top end surface is flush with the block top surface.
   Press-fit it toward the chamfer as shown in the illustration.

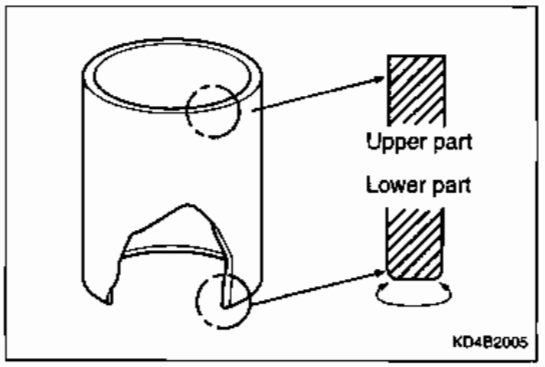

   4) To prevent the cylinder sleeve and cylinder block top surfaces from roughness and bump, cut the cylinder block top surface.
   Difference between them should be '0' as possible. (The limit: 0.2mm)

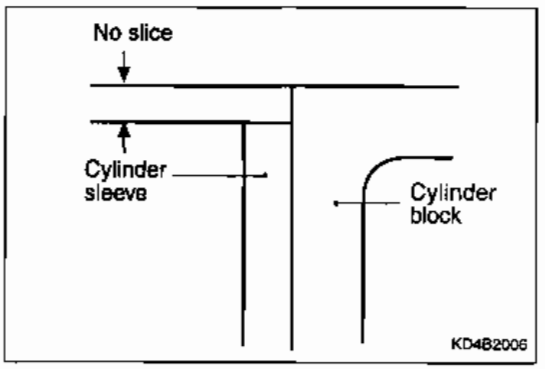

   5) Chamfer the cylinder sleeve top end as shown in the illustration.

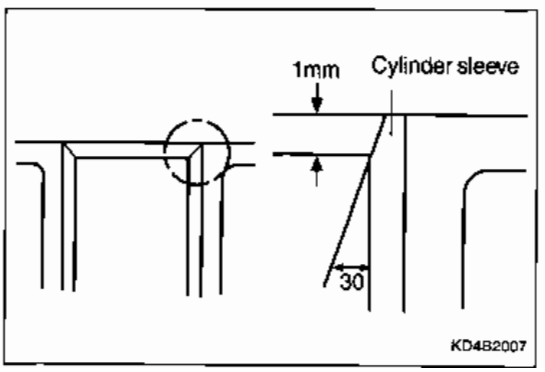

6) Cylinder sleeve I.D. is processed with 90.08~90.10mm, after press-fitting the sleeve, hone the bore to be within the standard value.

Cylinder bore	91.10~91.13mm
Honing surface formation	2~4
Honing rendering angle (Cross-hatch)	15~25°
Cylinder bore perpendicularity	0.05mm

2. Boring cylinder sleeve hole

   1. Prepare a 0.5mm oversized cylinder sleeve.
   2. Hone the cylinder block sleeve hole to 94.025~94.050mm.
   3. Press-fit the cylinder sleeve and render the bore.
      For press-fit and process procedures, refer to "Without boring block sleeve hole".

INSPECTION AFTER ASSEMBLY

1. After assembling the crankshaft and piston, inspect protrusion of the piston.
   If the protrusion is out of the limit, replace the piston inserted into thin one to be the protrusion within the limit.
2. After procedure 1, if the protrusion is not within the limit, replace the cylinder block.

Limit	1.1 mm

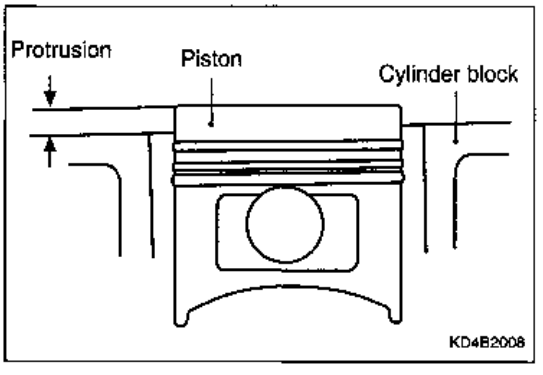

CHAPTER 3. LUBRICATION

1. OIL FILTER 3- 1

2. OIL PAN 3- 5

3. OIL PUMP 3- 7

1. OIL FILTER

COMPONENTS

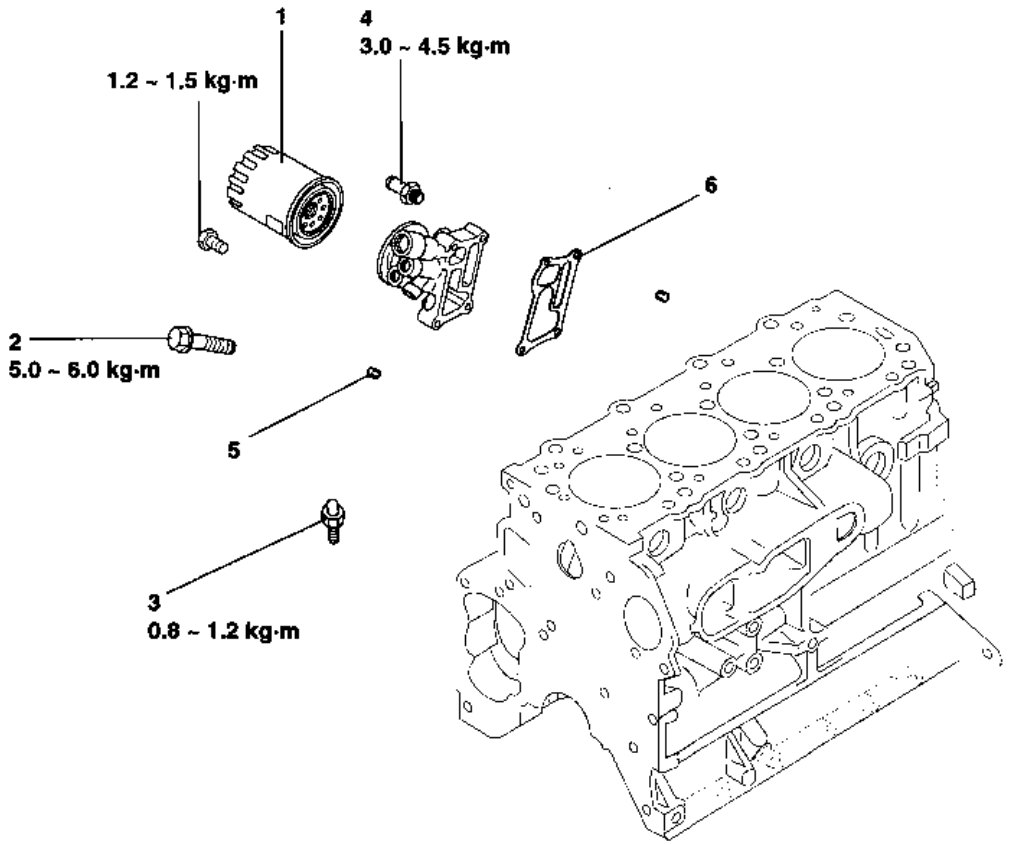

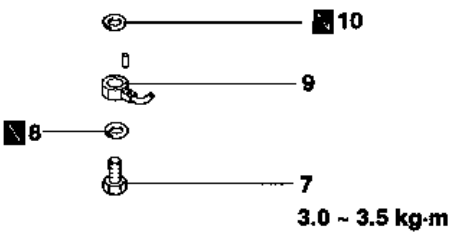

[DISASSEMBLY]
1. Oil filter
2. Oil cooler by - pass valve
3. Oil pressure switch
4. Joint
5. Tapper plug
6. Oil filter bracket
7. Check valve
8. Gasket
9. Oil jet
10. Gasket

[Remarks]
(1) Assembly is the reverse of disassembly
(2) Do not reuse N marking parts

KCUB050A

REMOVAL

OIL PRESSURE SWITCH

To remove the oil pressure switch, use Oil Pressure Switch Wrench (09260 - 32000).

⚠ ***CAUTION***
During removal, use care to prevent damage to the sealant applied to threads.

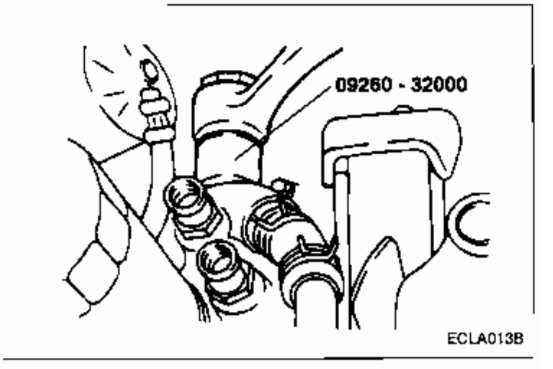

INSPECTION

OIL FILTER BRACKET

1. The oil filter mounting surface must be free from damage.
2. Check for cracks and oil leaks.

OIL PRESSURE SWITCH

1. Connect a tester (Ω range) between the terminal and the body of the switch to check for continuity. The switch is normal if there is continuity. If there is no continuity, replace the switch.

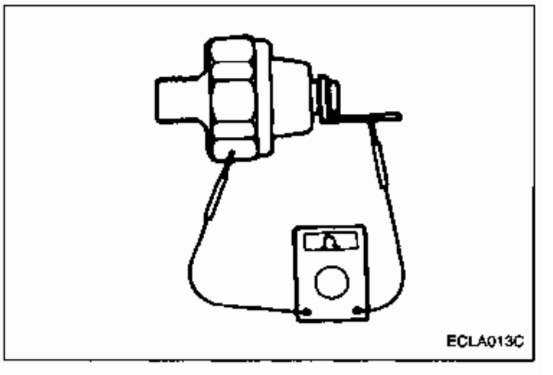

2. Insert a thin rod in the oil hole of the switch and push it in lightly. The switch is normal if no continuity is detected (infinite resistance on the tester). If there is continuity, replace the switch.

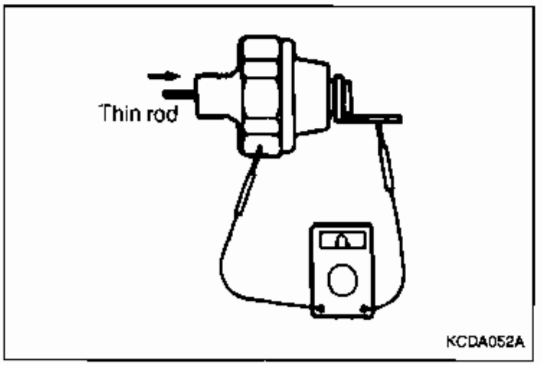

3. Apply a 0.5 kg/cm² pressure to the oil hole. The switch is normal if there is no continuity. Also check for air leaks. If any air leaks are detected, the cause may be a broken diaphragm. Replace the switch if it leaks.

OIL JET, CHECK VALVE

1. Check the oil jet and check valve for clogging.
2. Check the oil jet for damage and deformation.

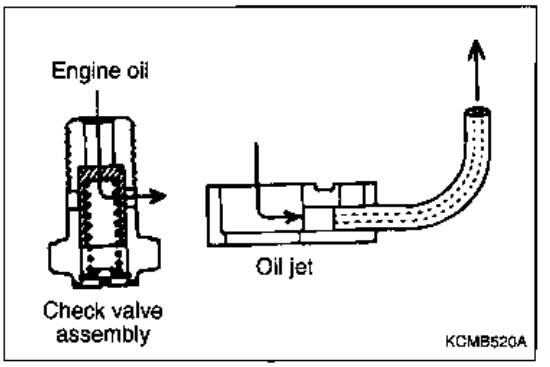

OIL COOLER BYPASS VALVE

1. Ensure that the dimension L measures the standard value under normal temperature and humidity.

Dimension L	34.5mm

2. The dimension must be the standard value when measured after the valve has been dipped in 100°C.

Dimension L	40mm

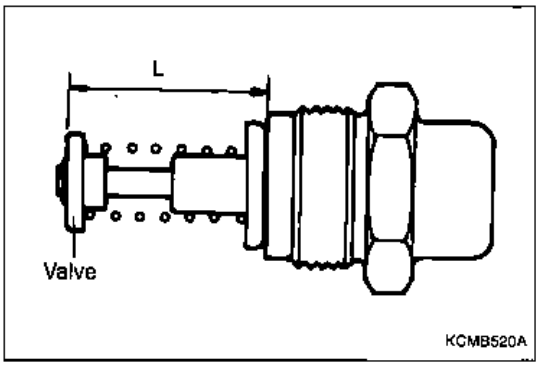

INSTALLATION

OIL JET

There are two types of oil jets installed: one for No. 1 and 3, and the other for No. 2 and 4. Make sure that the correct one is installed with correct direction as shown.

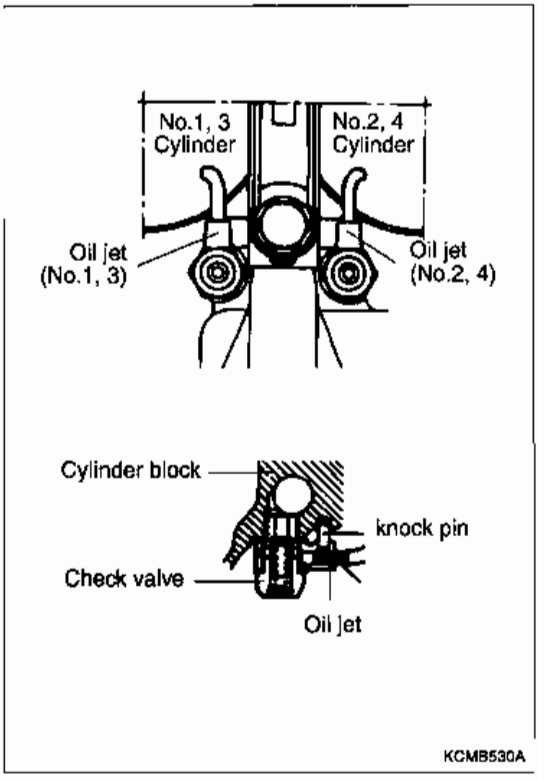

OIL JET SWITCH

1. Before installation, apply sealant to the switch threads.

⚠ ***CAUTION***

- ***The sealant must not get into the thread top surface.***
- ***Use care not to torque excessively.***

2. OIL PAN

COMPONENTS

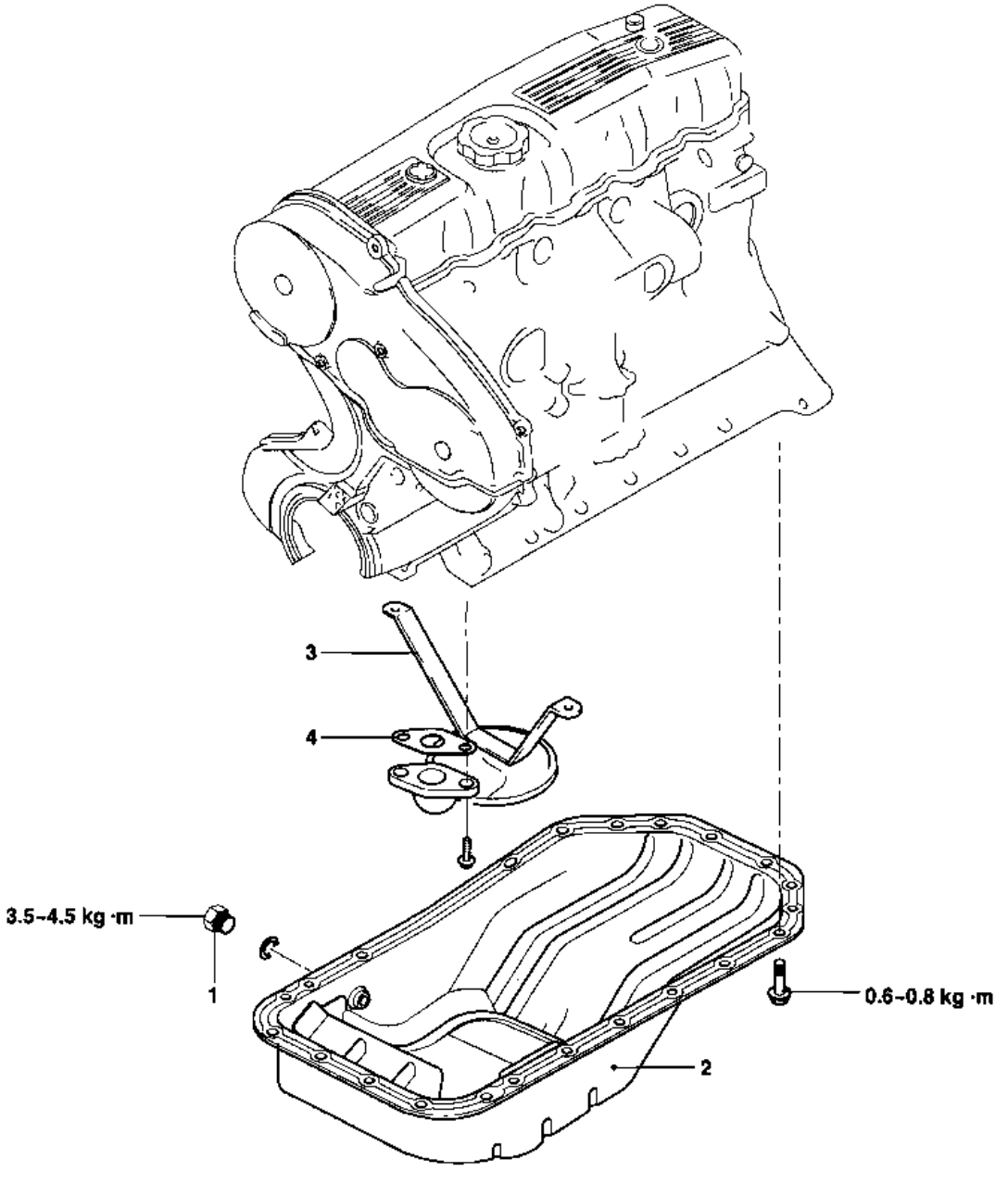

1. Drain plug
2. Oil pan
3. Oil screen
4. Gasket

KD4B3001

REMOVAL

OIL FAN

When the oil pan is stuck with the gasket, remove it by tapping the drain plug downward with a plastic hammer or equivalent.

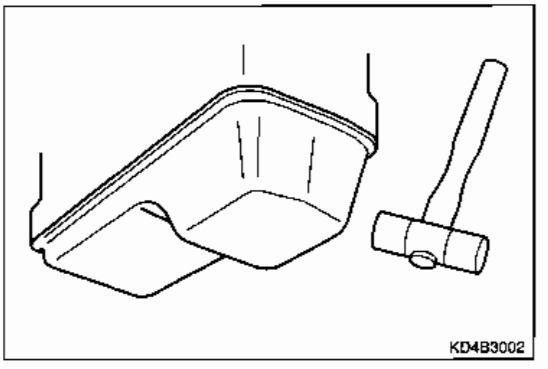

INSTALLATION

OIL FAN

1. Remove the gaskets attached in the oil pan and cylinder block using a scrapper, wire brush, etc.

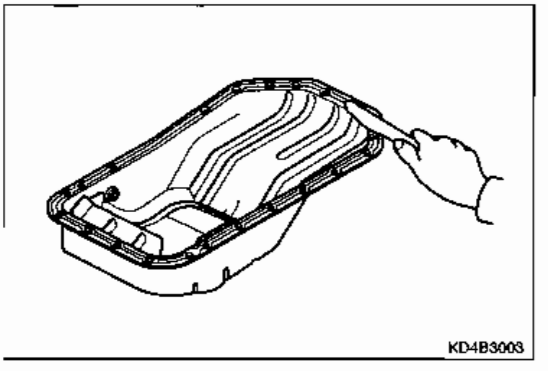

2. Cut the nozzle attached to the liquefied gasket as shown in the illustration. The liquefied gasket comes out with 4mm diameter.

Semi-dry sealant	MZ 100080 THREEBOND TB1212

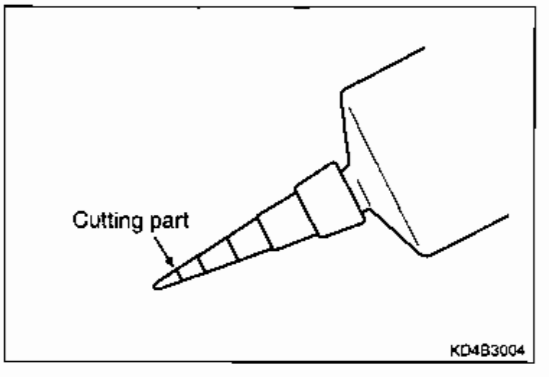

3. Squeeze the liquefied gasket from the tube and apply it to the oil pan as shown in the illustration.

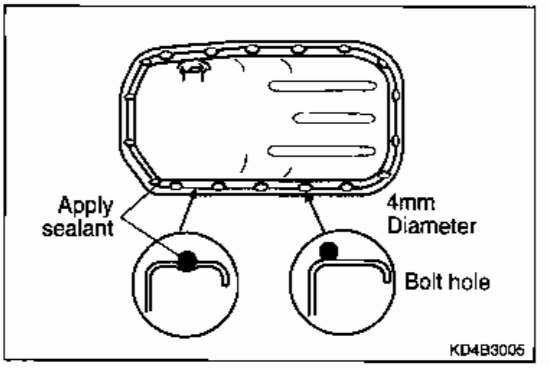

3. OIL PUMP

COMPONENTS

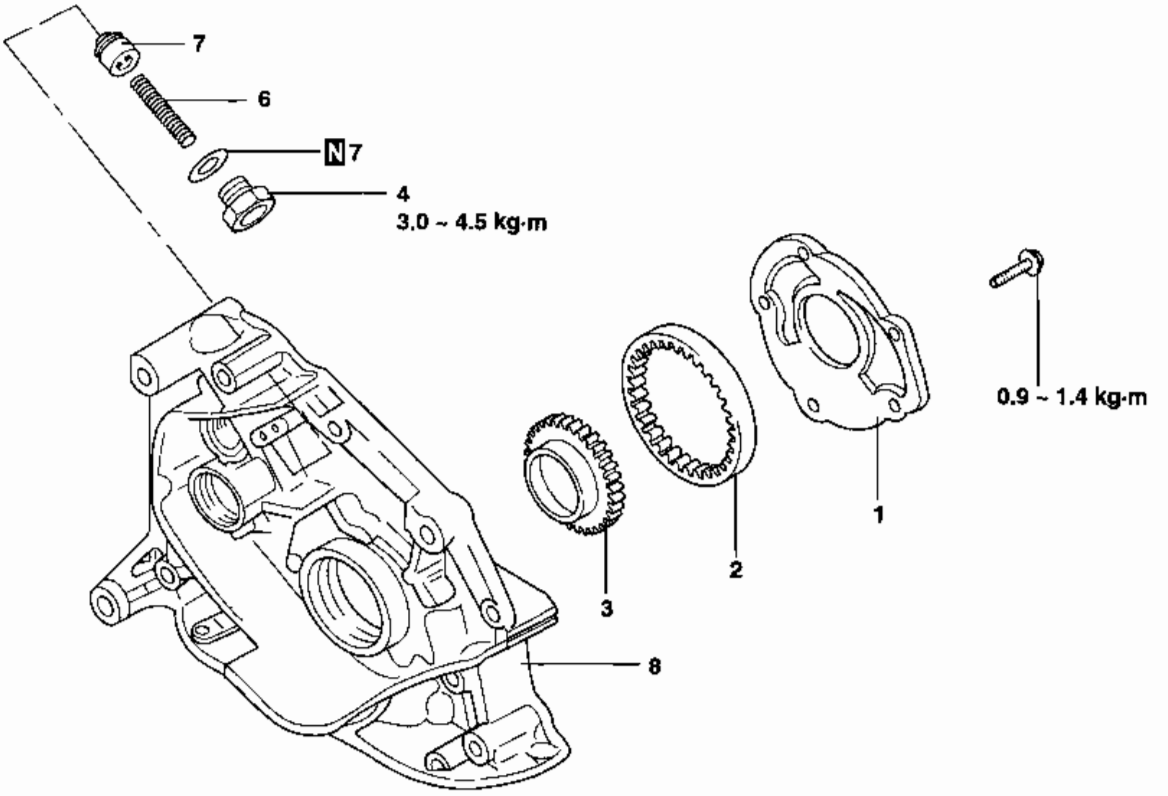

1. Oil pump cover
2. Oil pump outer gear
3. Oil pump inner gear
4. Plug
5. Gasket
6. Relief plunger
7. Relief spring
8. Oil pump case

[Remark]
Do not reuse N marking parts.

KCMB550A

DISASSEMBLY

Before removing the oil pump outer and inner gears, mark the outer gear to make sure that it goes back to the position with correct direction.

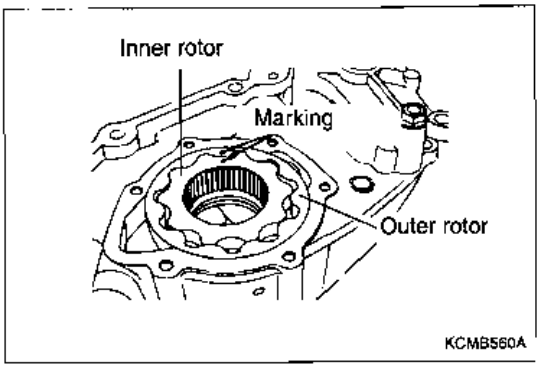

INSPECTION

OIL PUMP ROTOR

1. Install the outer and inner gear into the front case and make sure that they turn smoothly with no excessive play between them.
2. Check the side clearance (the front case and oil pump cover surface).

Standard	0.04 ~ 0.10 mm
Limit	0.15 mm

3. Measure the body clearance and if the measure value ex ceeds the limit, replace the gear or case.

Item	Standard	Limit
Inner rotor	0.22 ~ 0.35 mm	0.5 mm
Outer rotor	0.12 ~ 0.22 mm	0.4 mm

4. Check the oil pump cover rotor contact surface for wear and if there is bump, replace the cover. (If the individual part is not available, replace it as an oil pump case assembly).

INSTALLATION

OIL PUMP INNER ROTOR/OIL PUMP OUTER ROTOR

1. Apply engine oil to all rotor surfaces.

2. Install the gear in the same direction as markings represented during disassembly.

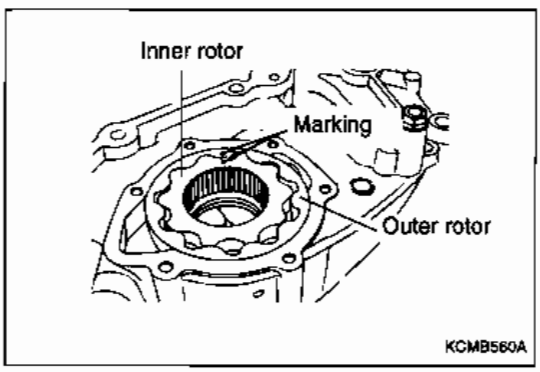

3. When air pressure of 0.5kg/cm² is applied to the oil hole, if there is no continuity, it is normal.
   If air leakage is detected, replace the switch because the dia phragm may be damaged.

OIL JET, CHECK BELT

1. Check the oil jet and check valve for clogging.
2. Check the oil jet nozzles for damage or deformation.

OIL COOLER BYPASS VALVE

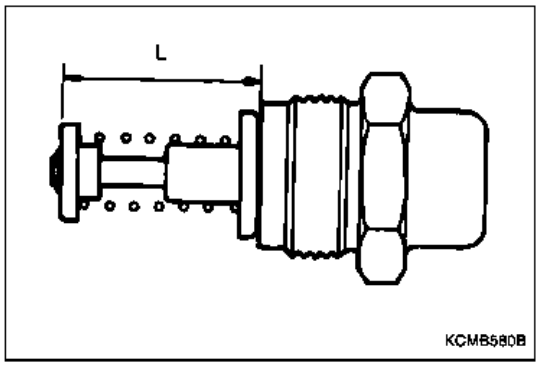

1. Standard value of 'L' at room temperature.

Standard	34.5mm

2. Limit value of 'L' after coming out from oil of 100°C.

Limit	40mm not less than

CHAPTER 4. COOLING SYSTEM

1. WATER PUMP & WATER PIPE 4- 1

2. RADIATOR FAN MOTOR 4- 4

3. THERMOSTAT 4- 8

4. RADIATOR 4- 10

1. WATER PUMP AND WATER PIPE

COMPONENTS

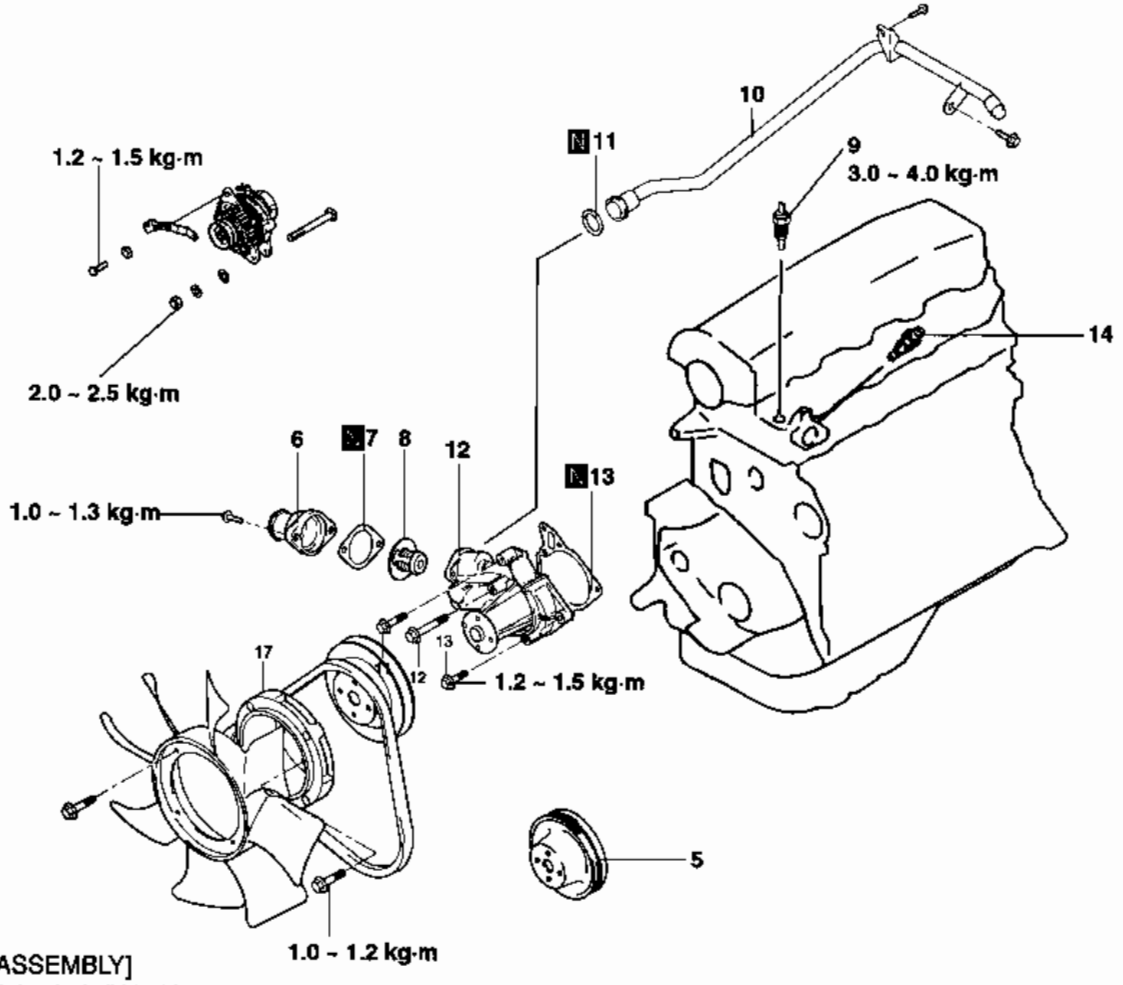

[DISASSEMBLY]
1. Drive belt (V belt)
2. Cooling fan
3. Fan clutch
4. Water pump pully
   (Power steering pump pully adhere)
5. Water pump pully
6. Water inlet fitting
7. water inlet fitting gasket
8. Thermostat
9. Coolant temperature gauge unit
10. Water inlet pipe
11. O-ring
12. Water pump
13. Water pump gasket
14. Thermostat assembly

[Remarks]
(1) Assembly is the reverse of disassembly
(2) Do not reuse N marking parts

KCMB300A

INSTALLATION

DRIVER BELT

Inspect the following items and replace them if required.

1. Loose belt
2. Damage, crack, and wear

WATER PUMP & HOSE

1. Water pipe for crack, damage and clogging
2. Water hose for crack, damage and clogging

WATER PUMP

Check each part for cracks, damage or wear, and replace the water pump assembly if necessary.

1. Coolant leaks
2. Coolant leaks from A
3. Water pump body for damage and crack
4. Impeller for damage and crack
5. Bearing for damage

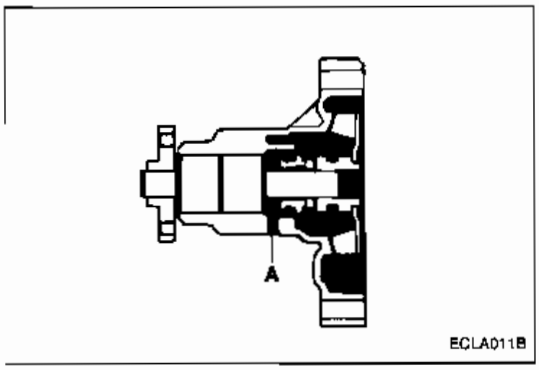

ASSEMBLY

WATER PUMP

1. Clean the gasket contact surfaces inserting between the water pump and cylinder block.
2. Bolt sizes are as below.

No	Hardness category	dx1	Torque
1	4T	4T	1.2~1.5 kg·m
2	4T	4T	1.2~1.5 kg·m
3	7T	7T	2.0~2.7 kg·m

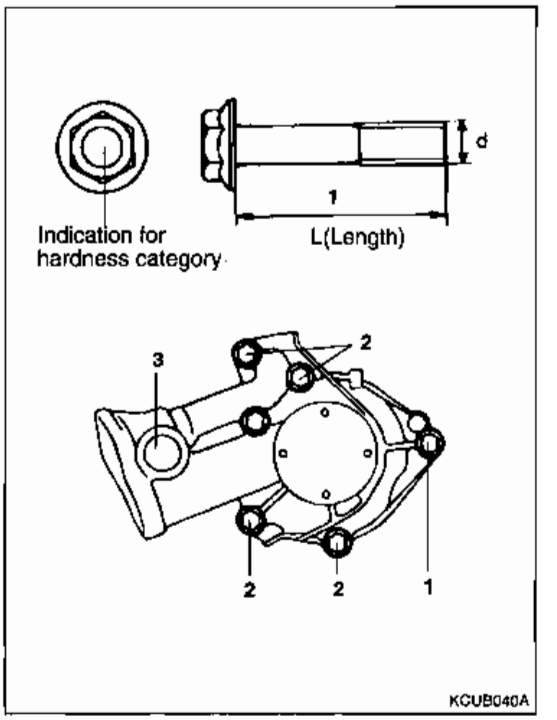

WATER PIPE & O-RING

1. Fit water pipe O-ring in the groove provided at water pipe end, wet the periphery of water pipe O-ring and insert water pipe.

   ⚠ ***CAUTION***
   Do not apply oil and grease to water pipe O-ring.

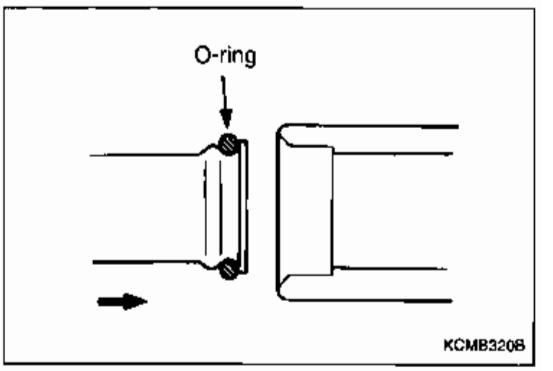

2. RADIATOR PAN MOTOR

COMPONENTS

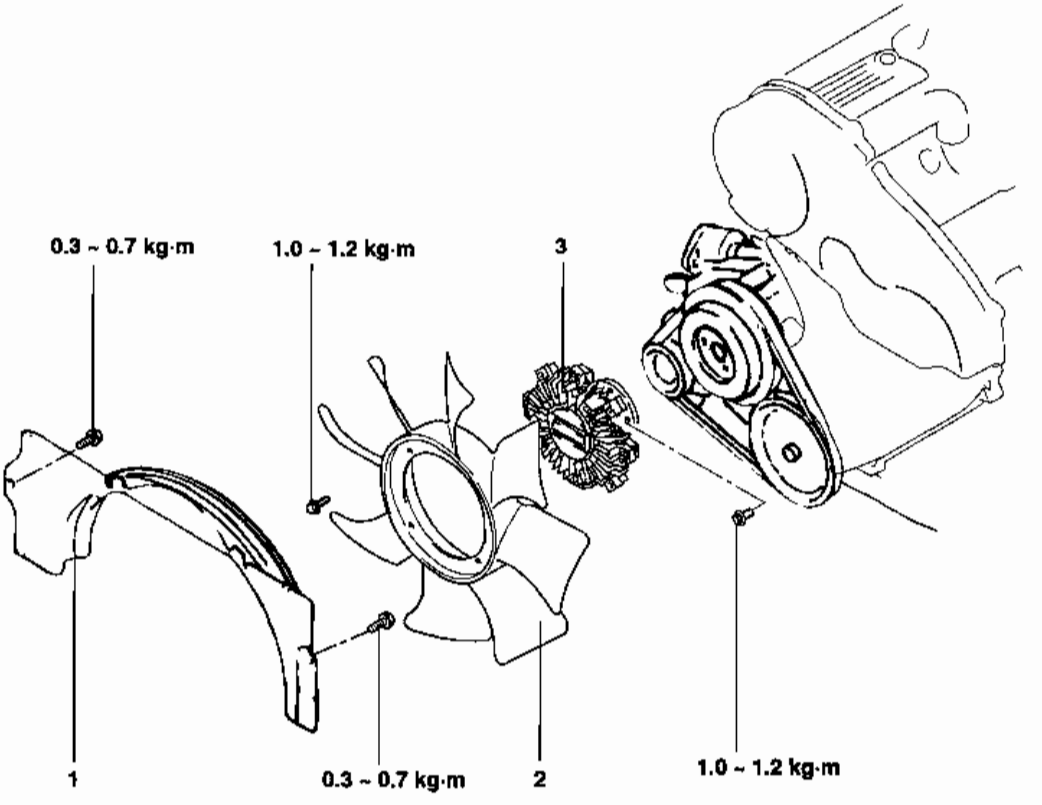

[DISASSEMBLY]
1. Radiator upper shroud
2. Cooling fan
3. Cooling fan clutch

[Remark]

(1) Assembly is the reverse of disassembly

KCMB420A

INSPECTION

COOLING FAN

1. Check the blades for damage and cracks.
2. If any portion of fan is damaged or cracked, replacecooling fan.

FAN CLUTCH

1. Check the case joint and seal for oil leakage from the pan clutch.
2. Oil leakage may cause overheating the engine resulting from the pan speed decrease.
3. Check the bimetal strip for damage

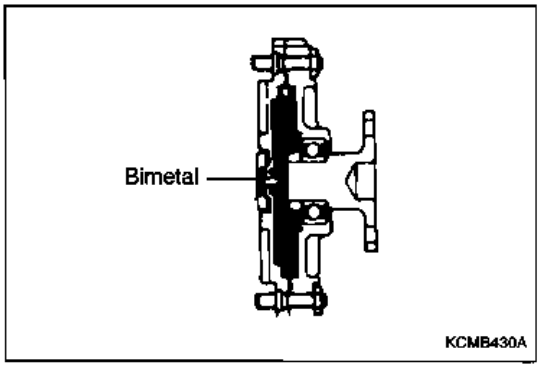

COMPONENTS

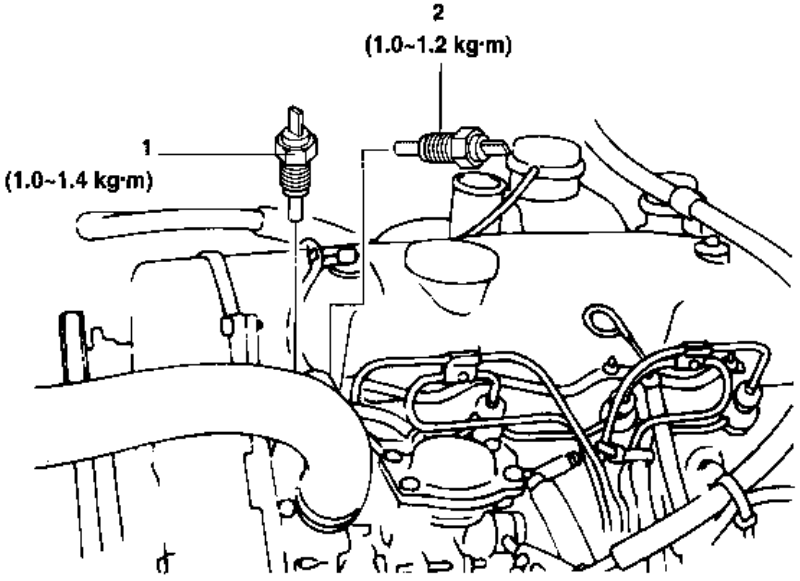

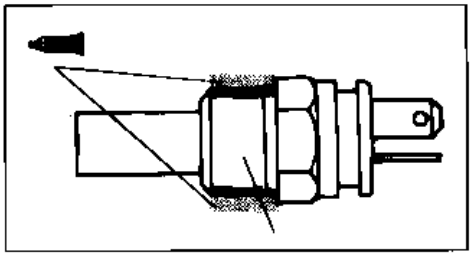

[DISASSEMBLY]
1. Whter temperature gauge unit
2. Thermo switch (113°C)
   (For A/C equipped vehicle)

KCMB450A

INSPECTION

WATER TEMPERATURE GAUGE UNIT

1. Put the sensor in water and increase the water temperature measure the resistance.

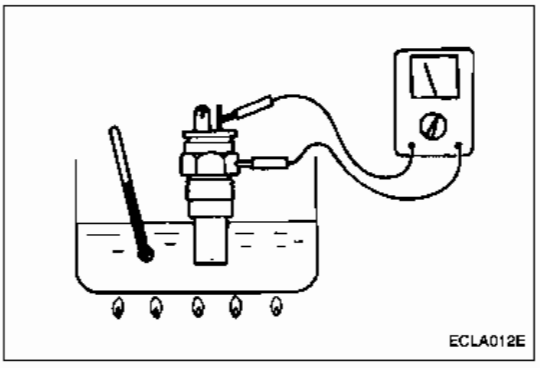

2. If the measurement radically deviates from specification, replace.
3. Measure the resistance across terminal (A) and body for water temperature gauge element and across terminal (B) and body for glow control element.

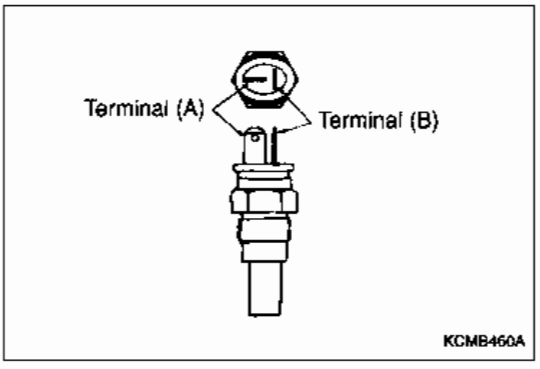

Standard

Terminal (A) (For coolant temp)	0.4Ω / 70°C
	23.8Ω / 115°C
Terminal (B) (For preheat plug)	24.8Ω / -20°C
	3.25Ω / 20°C

THERMO SWITCH (FOR A/CON)

1. After inserting the coolant temperature switch into oil, heat the oil.
2. Check that the coolant temperature switch is turned OFF when the oil temperature reaches the standard.

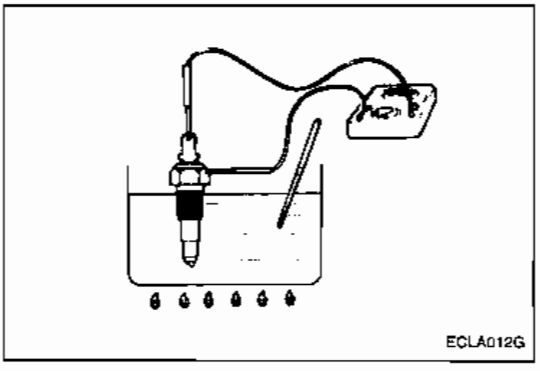

Standard

Coolant temperature at A	113 ± 3°C
Coolant temperature at B	106°C

⚠ ***CAUTION***

Only engine oil is available and stir the oil during heating. Do not overheat.

3. THERMOSTAT

COMPONENTS

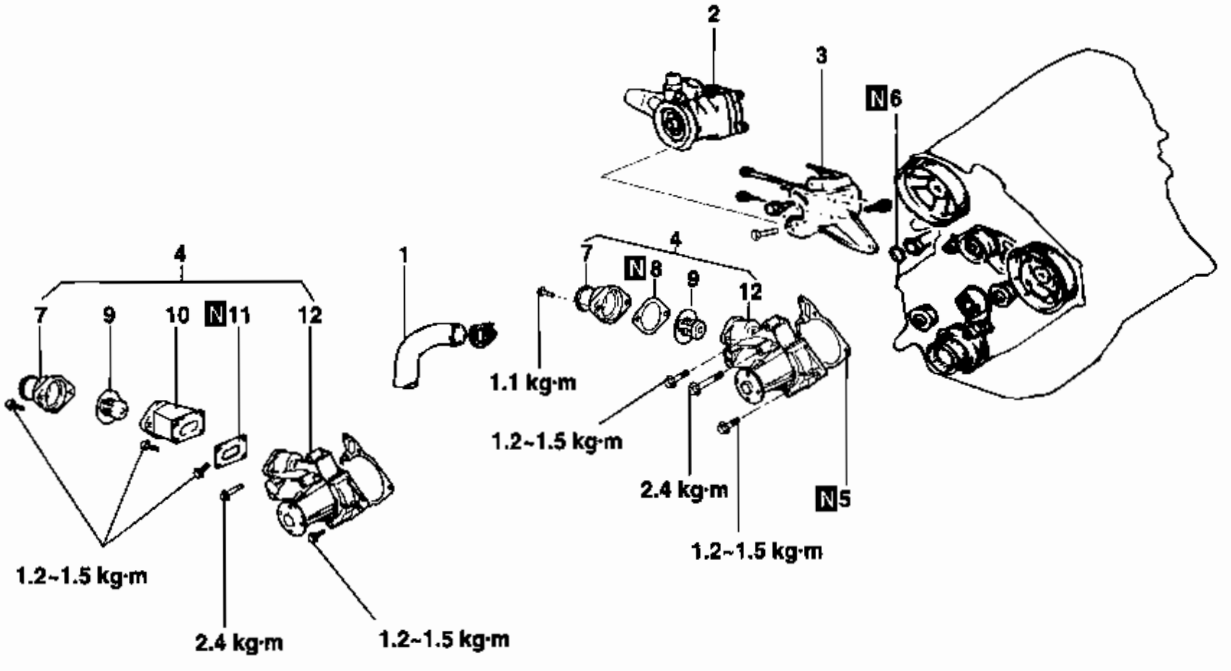

[THERMOSTAT DISASSEMBLY]
1. Radiator lower hose
7. Water inlet fitting
8. Gasket
9. Thermostat

[WATER PUMP DISASSEMBLY]
1. Radiator lower hose
2. Power steering oil hose
3. Power steering oil pump bracket
4. Water pump & thermostat
5. Water pump gasket
6. O-ring
10. Thermostat housing
11. Thermostat housing gasket
12. Water pump

KCUB040C

INSPECTION

1. Check that valve closes tightly at room temperature.
2. Check for defects or damage.

3. Immerse thermostat in container of water.

Opening valve temperature	82 ± 2°C
	76.5 ± 2°C

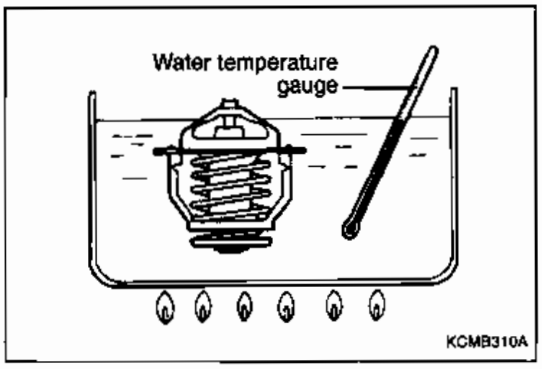

ASSEMBLY

Assemble the thermostat in the direction shown in the illustration.

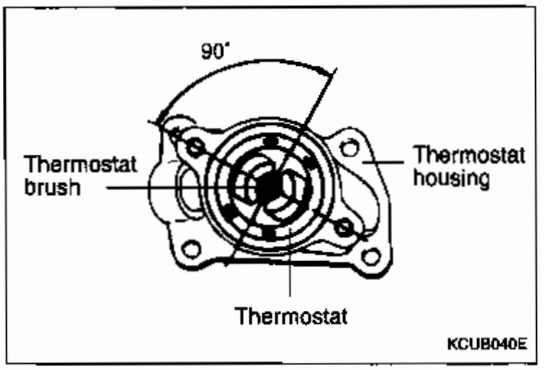

4. RADIATOR

COMPONENTS

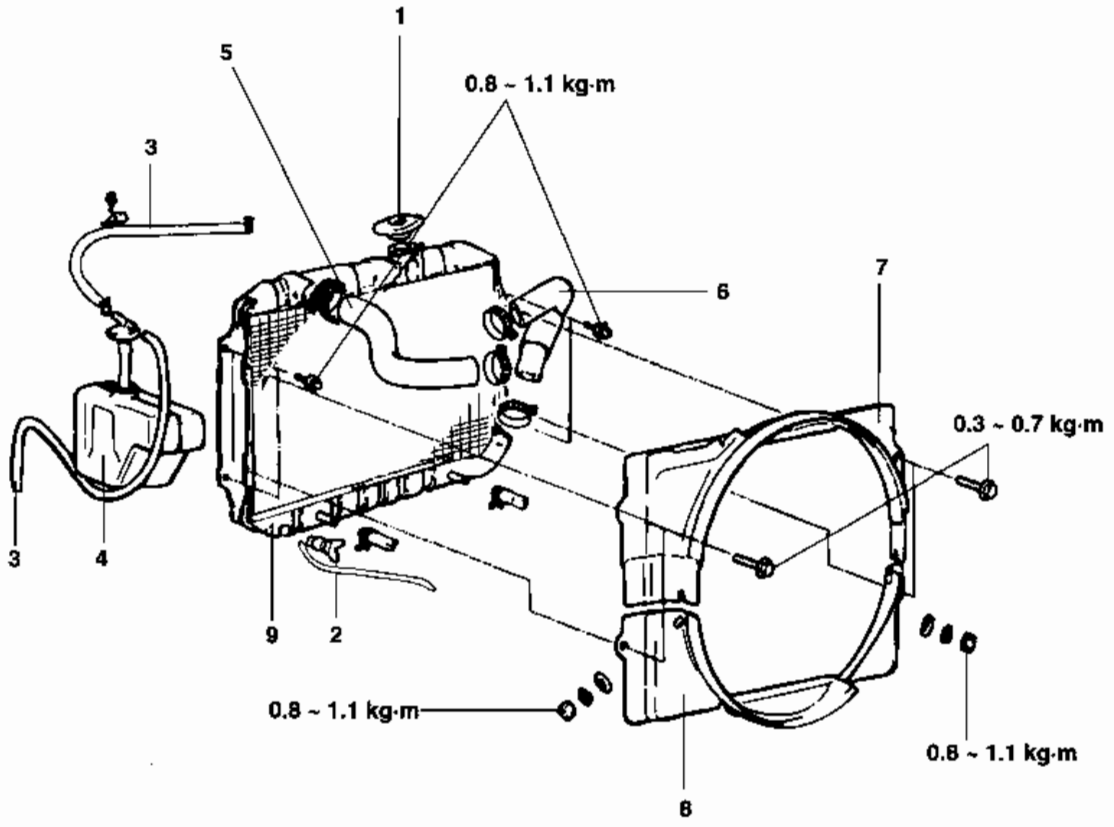

[DISASSEMBLY]
1. Radiator cap
2. Drain plug
3. Over flow tube
4. Reserve tank
5. Radiator upper hose
6. Radiator lower hose
7. Radiator upper shroud
8. Radiator lower shroud
9. Radiator

[Remark]

(1) Installation is the reverse of removal.

KCMB400A

INSPECTION

1. Check between the radiator pins for foreign material.
2. Check the radiator pins for bending or damage.
3. Check the radiator for contamination, damage or rust.
4. Check the radiator hose for crack, damage or deformation.
5. Check the reservoir tank for damage.
6. Check the radiator cap spring for damage.
7. Check the radiator cap packing for damage or crack.

CHAPTER 5. INTAKE AND EXHAUST SYSTEM

1. INTAKE AND EXHAUST MANIFOLD 5- 1

2. TURBO CHARGER (TC) 5- 3

3. AIR CLEANER 5- 8

1. INTAKE AND EXHAUST MANIFOLD

COMPONENTS

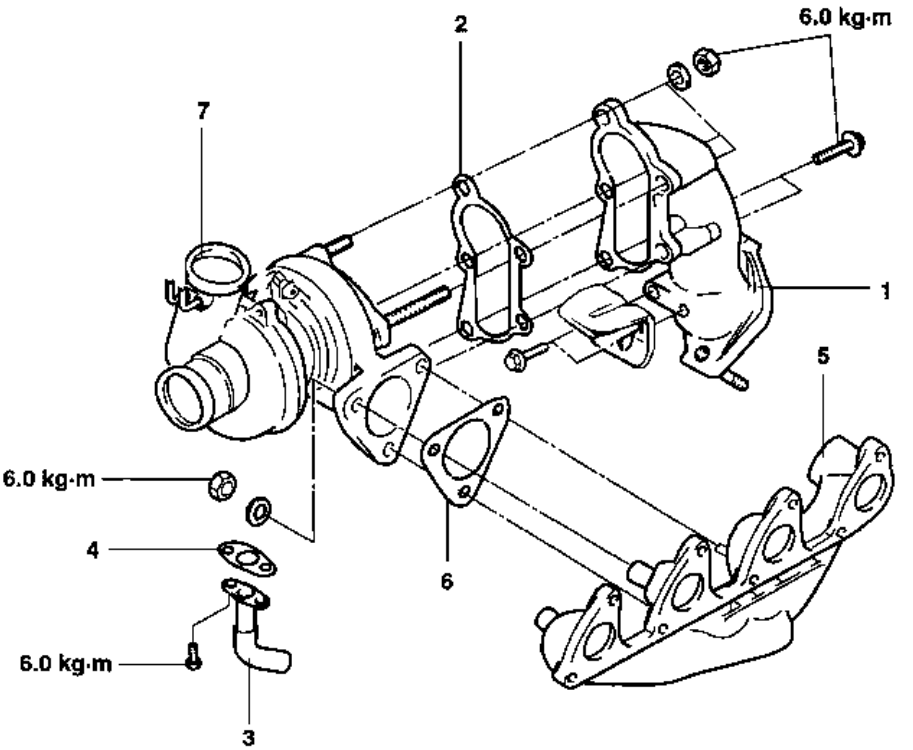

1. Exhaust fitting
2. Gasket
3. Oil return pipe
4. Oil return pipe gasket
5. Exhaust manifold
6. Turbo charger gasket
7. Turbo charger assembly

KCMB600A

ASSEMBLY

TURBO CHARGER ASSEMBLY

Remove the heat protector.

⚠ ***CAUTION***
Be careful of foreign material not to come in the oil passage during cleaning.

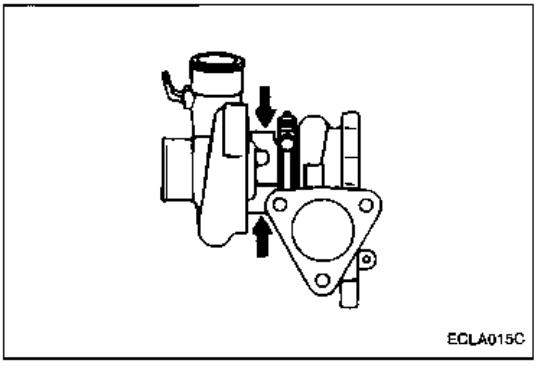

EYE BOLT

Before installing the oil pipe eyebolt (turbocharger upper part), fill the turbocharger with clean engine oil. After full filling, check that the turbine and compressor wheel are rotating smoothly.

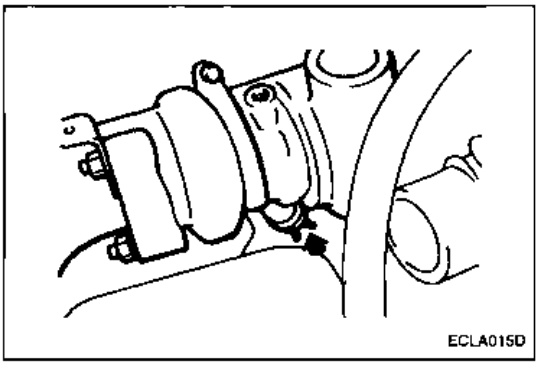

2. TURBO CHARGER (TC)

COMPONENTS [D4BF]

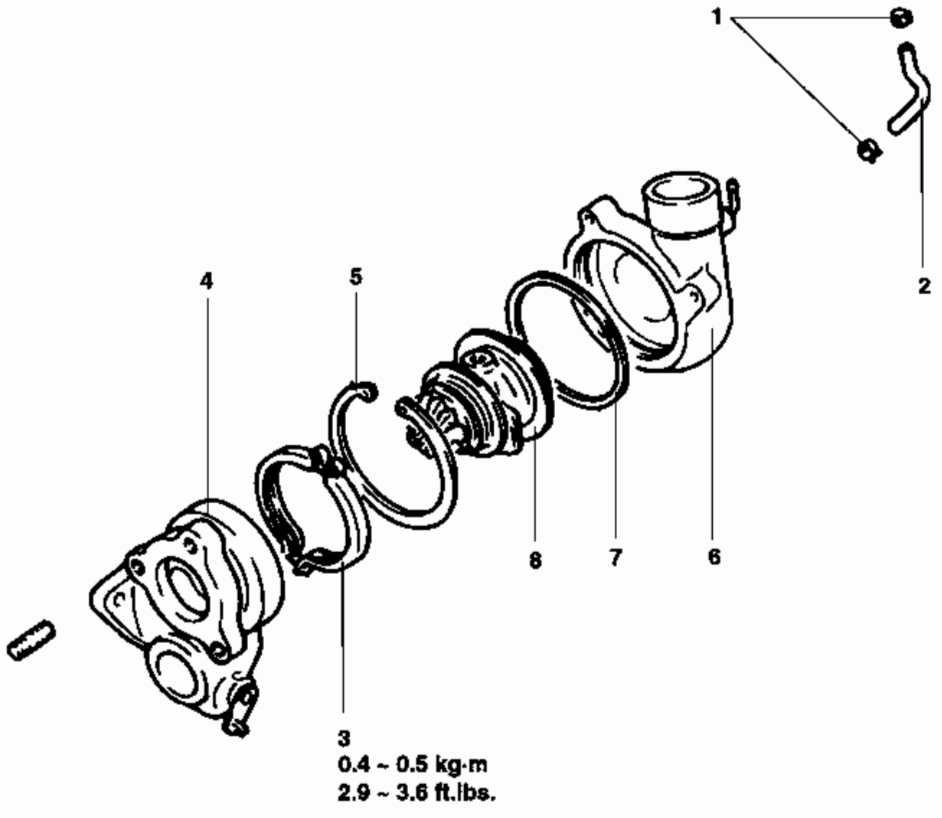

[DISASSEMBLY]

1. Hose clip
2. Hose
3. Coupling
4. Turbine housing
5. Snap ring
6. Compressor cover
7. O-ring
8. Cartridge assembly

KCUB060A

DISASSEMBLY

TURBINE HOUSING

Before removal, make the mating mark on compressor cover bearing housing and turbine housing.

⚠ ***CAUTION***
Be sure not to damage the compressor and turbine wheel blade.

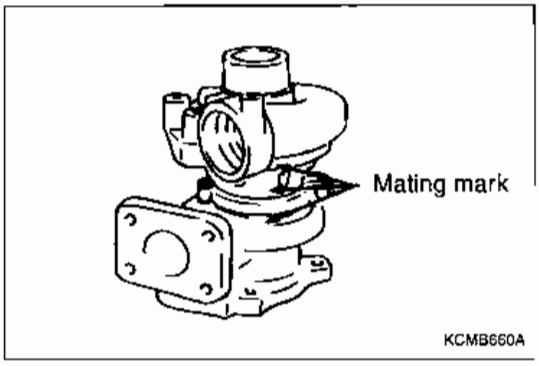

SNAP RING

Remove the snap ring using snap ring filler.

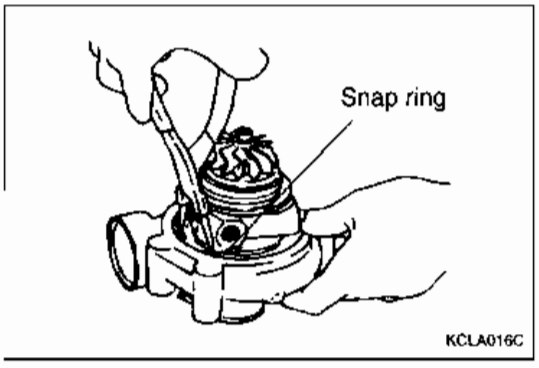

CARTRIDGE ASSEMBLY

Remover by tapping the compressor cover of cartridge assembly with plastic hammer.

NOTE
O-ring installed around the cartridge assembly may cause tight installation sometimes.

⚠ ***CAUTION***
- ***Use a heavy duty carbon solvent to loosen the carbon from the parts.***
- ***Do not use caustic solutions, wire brushes, or wire wheels to remove carbon deposits from any turbo charger part.***

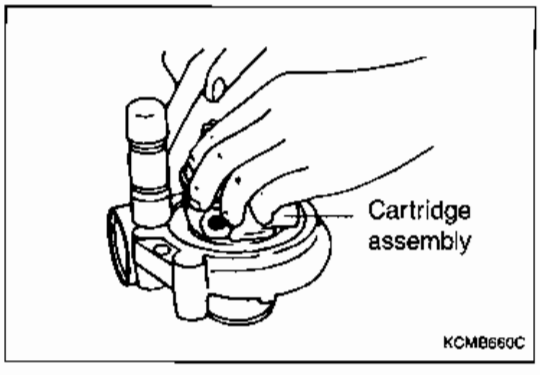

INSPECTION

TURBINE HOUSING

1. Check the inner housing contacting turbine wheel for crack, pitching and other damages caused by overheat.

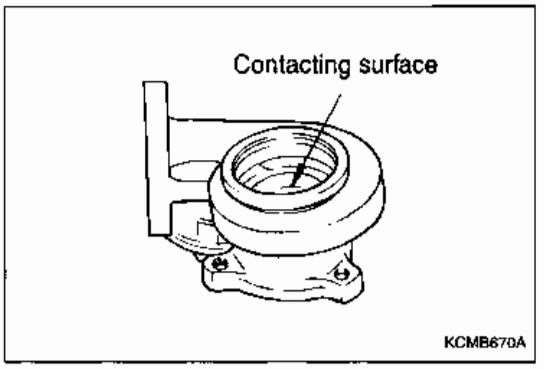

2. Make sure that the waste gate valve lever operates freely by hands.

COMPRESSOR COVER

Make sure there are no damages on the inner housing surface contacting compressor wheel.

C ARTRIDGE ASSEMBLY

1. Turbine wheel and shaft assemblies with cracks in the blades or broken blades can not be used again. If the blades are slightly bent, it can be used again but severely bent blades can not be reused.
2. Check if there are foreign materials disturbing the oil flow in the oil passage of cartridge assembly.

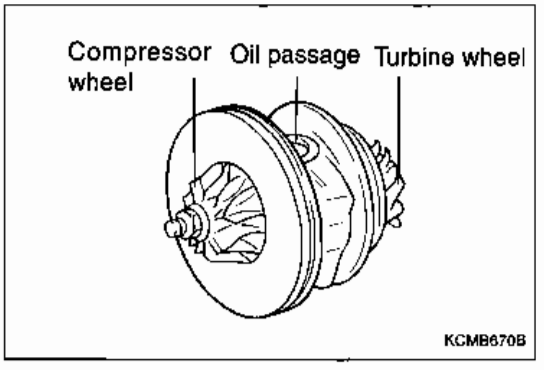

OIL PIPE AND OIL RETURN PIPE

Check the oil pipe and oil return pipe for clogging and deformation. Repair or replace them if required.

WASTE GATE INSPECTION

Check the waste gate rod operation under the pressure below.

Pressure

TCI engine	Approx. 0.80kg/cm²

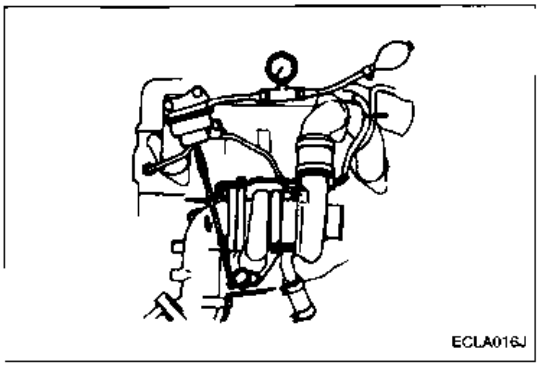

ASSEMBLY

O-RING ASSEMBLY

Apply engine oil to the new O-ring thinly and assemble the cartridge assembly.

⚠ ***CAUTION***
Take care not to damage the O-ring.

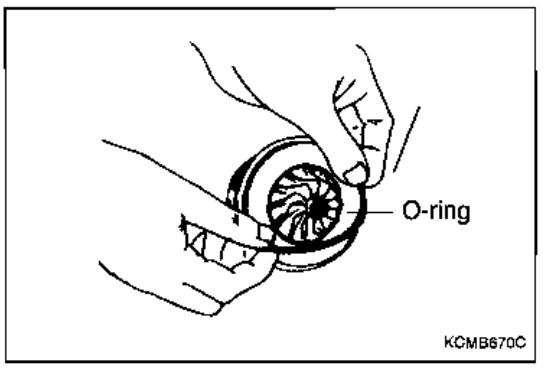

COMPRESSOR COVER/CARTRIGE ASSEMBLY

1. Install the cartridge assembly to the compressor cover with them mating as marked when disassembling.
2. When replacing it with a new one, install it as shown in the left illustration.

⚠ ***CAUTION***
When installing the cartridge assembly to the compressor cover, take care not to damage the compressor wheel blade.

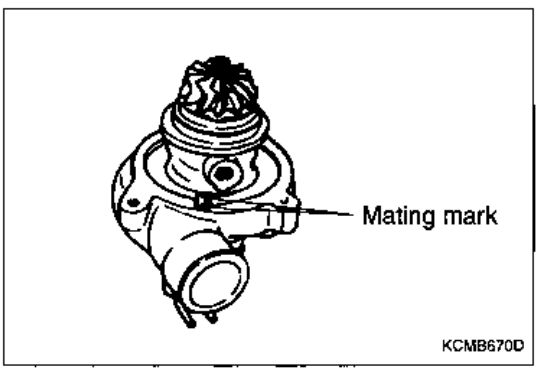

SNAP RING

Install the snap ring with the compressor cover downward.

⚠ ***CAUTION***
Install the snap ring with the chamfer upward.

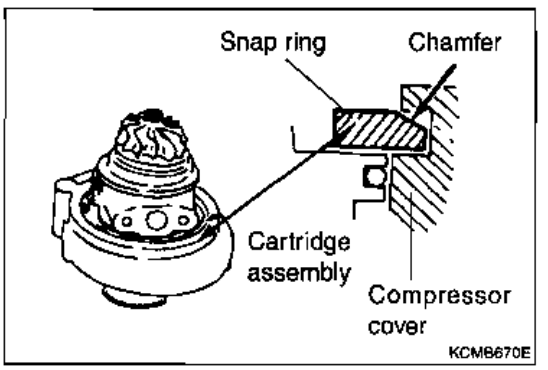

TURBINE HOUSING

Install the cartridge assembly to the compressor cover with them mating as marked when disassembling.

⚠ ***CAUTION***
Take care not to damage the compressor wheel blade.

3. AIR CLEANER

COMPONENTS

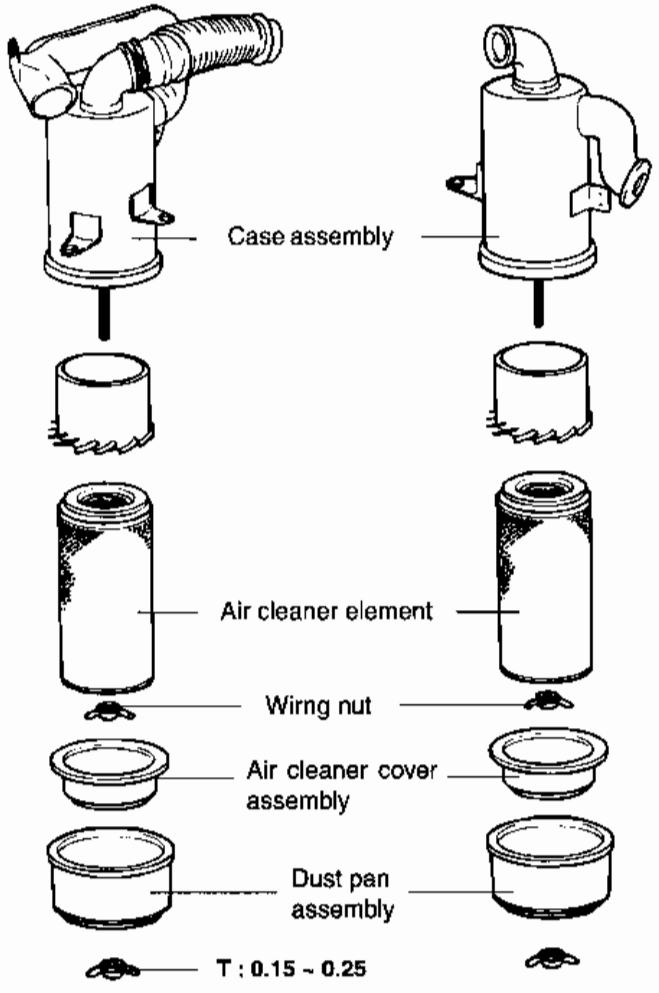

TORQUE : kg·cm

KCYB720A

CHAPTER 6. ENGINE ELECTRICAL

1. GENERAL 6- 1

2. SPECIFICATIONS 6- 2

3. SERVICE SPECIFICATIONS 6- 3

4. TIGHTENING TORQUE 6- 3

5. TROUBLESHOOTING 6- 4

6. ALTERNATOR 6- 11

7. STARTER MOTOR 6- 17

8. GLOW PLUG 6- 26

1. GENERAL

STARTER MOTOR

Starter motor is a reduction drive type.

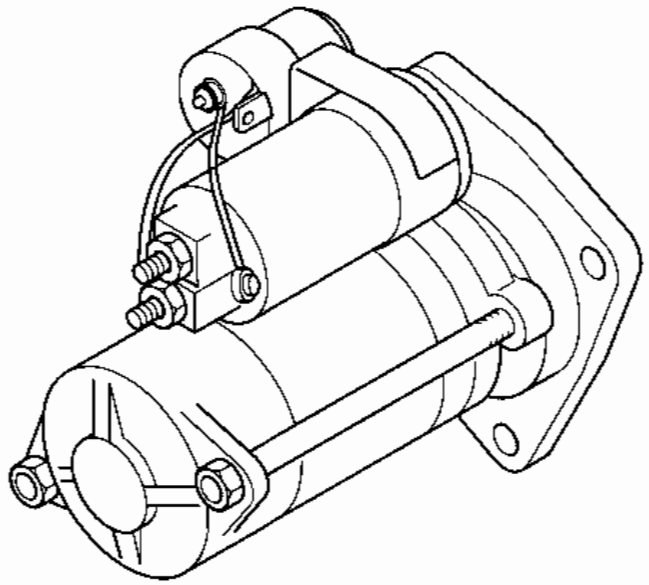

ALTERNATOR

Alternator is electronic voltage regulator built-in type.

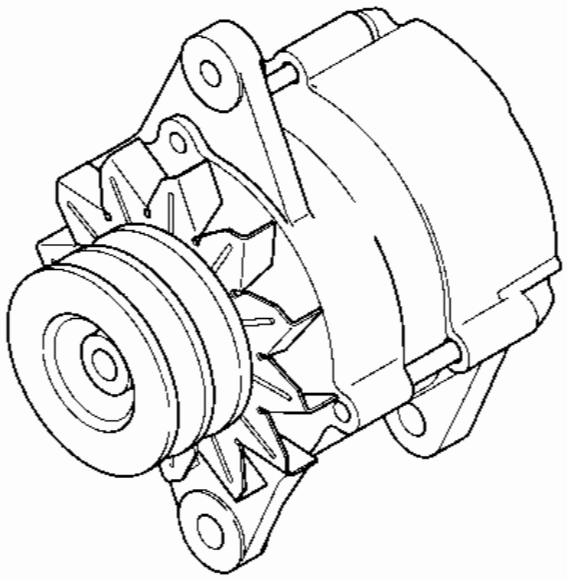

GLOW PLUG

Glow plug uses AGS.

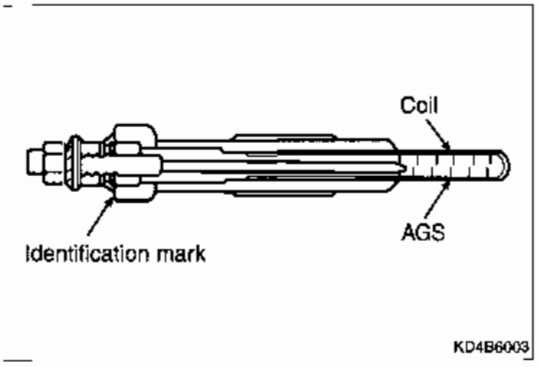

2. SPECIFICATIONS

ALTERNATOR

Item	Specification	Remark
Type	Battery voltage sensing	
Rated output	12V / 50A	
Motor speed	1,000 ~ 10,000 rpm	
Voltage regulator type	Electronic voltage regulator, with vacuum pump	
Regulator setting voltage	14.4 ± 0.3V	
Temperature compensated	-10 ± 3 mV/°C	

STARTER MOTOR

Item		Specification	Remark
Output		12V / 2.2KW (Generator, Excavator, Loader)	
		24V / 5KW (Bus aircon)	
Number of pinion teeth		13	
No-load characteristics	Terminal voltage	11V	
	Amperage	30A	

GLOW PLUG

Item	Auto glow
Identification mark	Y-115T
Type	Sheathed type

3. SERVICE SPECIFICATIONS

ALTERNATOR

Item	Standard	Limit
Brush length		Wear limit
Slip ring O.D.	33mm	32.2mm
Rotor coil resistance (at 20°C)	2.75 ± 0.2Ω	

STARTER MOTOR

No-load characteristics voltage (Bus aircon)	11V (23V)	
Amperage (Bus aircon)	130A (95A)	
Revolution number (Bus aircon)	4500rpm (3300rpm)	
Pinion gap	0.5~2.0mm	
Commutator O.D.	29.4mm	28.4mm
Undercut	0.5mm	0.2 mm
Outer round	0.05mm	0.1mm
Brush length		Wear limit

GLOW PLUG

Resistance AGS	0.5Ω (Generator, Excavator, Loader)	
	10Ω (Bus aircon)	

4. TIGHTENING TORQUE

Item	Torque (kg.m)	Remark
Lock bolt	1.2 ~ 1.5	
Generator support bolt nut	2.0 ~ 2.5	
Eye bolt	1.4 ~ 1.9	
Starter motor attaching bolt	2.7 ~ 3.4	
Glow plug	1.5 ~ 2.0	
Glow plug plate attaching nut	0.1 ~ 0.15	

5. TROUBLESHOOTING

STARTING SYSTEM

Trouble symptom	Probable cause	Remedy
Starter spins but engine will not crank	Starter motor faulty	After removing the starter motor, check the drive for crack and wear
	Flywheel ring gear teeth broken	Replace flywheel ring gear or torque converter
Engine will not crank	Battery cables loose, corroded or worn out	Repair or replace cables
	Battery charge low	Charge or replace battery
	Cables loose or cables wear	Tighten or replace cables
	Starter motor faulty	Repair or replace starter motor
Engine cranks slowly	Battery cables loose, corroded or worn out	Repair or replace cables
	Battery charge low	Charge or replace battery
	Starter motor faulty	Repair or replace starter motor

CHARGING SYSTEM

Trouble symptom	Probable cause	Remedy
Low battery	Wiring connection loose	Tighten loose connections
	Overload	Check and remove the accessories if required
	Worn battery	Replace battery
	Generator faulty	Repair or replace
	Electronic voltage regulator faulty	Replace voltage regulato
	Battery faulty	Check the battery or replace, if necessary

GLOW CONTROL SYSTEM

Trouble symptom	Probable cause	Remedy
Engine will not start below 50°C	Wiring connection loose or bad wiring	Repair or replace wiring
	ECT sensor malfunction	Replace ECT sensor
	Glow plug malfunction	Repair or replace glow plug
	Glow plug control unit failed	Replace glow control unit
After first combustion, engine stall or rough idle below 50°C	Wiring connection loose or bad wiring	Repair or replace wiring
	Glow plug malfunction	Check the resistance of glow plug and replace, if necessary
	Glow plug relay malfunction	Check the relay and replace, if necessary
	Glow plug control unit failed	Check the control unit and replace, if necessary
Yellow glow lamp will not turn-ON	Open lamp	Replace lamp
	Wiring connection loose or bad wiring	Repair or replace wiring
	Shorted wiring	Repair or replace wiring
	Glow plug control unit failed	Replace control unit, if necessary

VEHICLE INSPECTION

SPECIFICATIONS

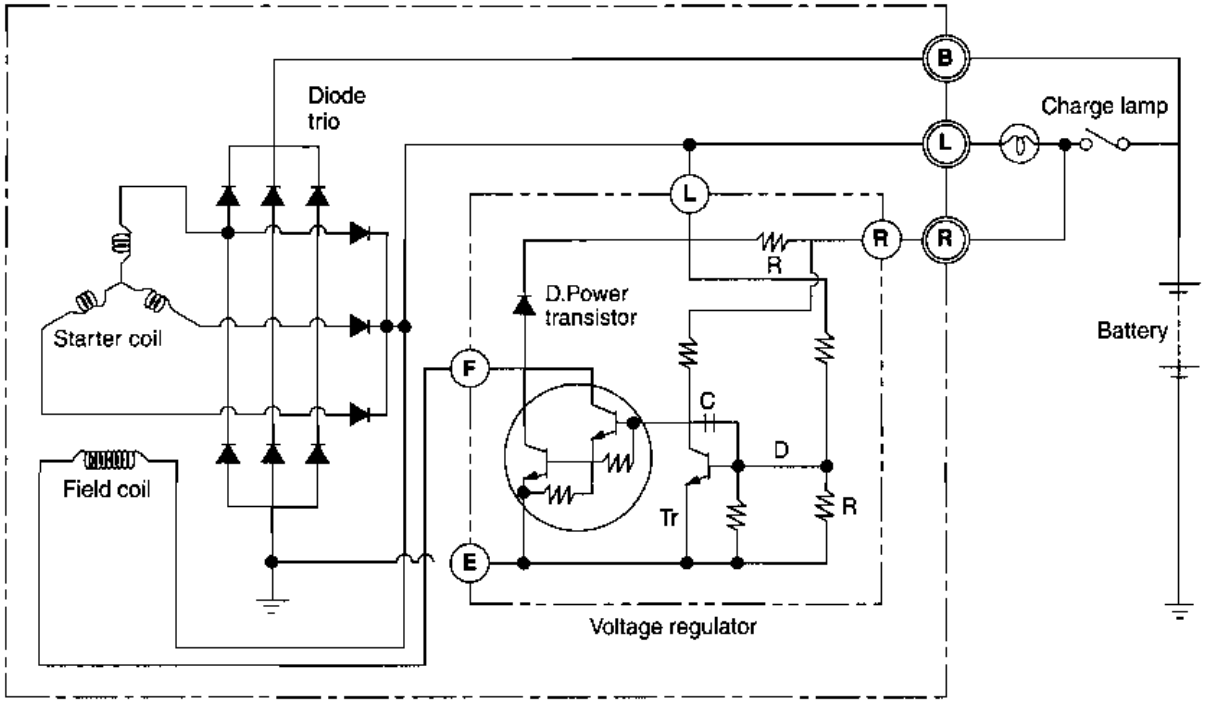

Alternator

KD4B6004

NOTE

Register with diode

- ***According to battery voltage detective type alternator adoption, when the charge warning lamp is short, to get the charging function, the continuity circuit of the L terminal (field coil) is installed parallel with the circuit of the charge warning lamp.***

INSPECTION

Check the following items before inspecting voltage regulator adjusting voltage alternator output current.

1. Alternator installation
2. Alternator drive belt tension
3. Battery specific gravity and voltage
4. Fusible link
5. Abnormal noise from alternator durng operation

NOTE
Use fully charged battery to obtain the standard value.

PREPARATION

1. Turn ignition switch to "OFF."
2. Disconnect the battery ground cable.
3. Connect a digital voltmeter between the "S(L)" terminal of the alternator and ground. Connect the (+) lead of the voltmeter to the "S(L)" terminal of the alternator. Connect the (-) lead to good ground or the battery (-) terminal.
4. Disconnect the alternator output wire from the generator "B" terminal.
5. Connect a DC ammeter (0 to 100A) in series between the "B" terminal and the disconnected output wire. Connect the (-) lead wire of the ammeter to the disconnected output wire.
6. Attach the engine tachometer and connect the battery ground cable.

REGULATED VOLTAGE TEST

1. Set the special tool wiring connector, voltmeter and ammeter as following.

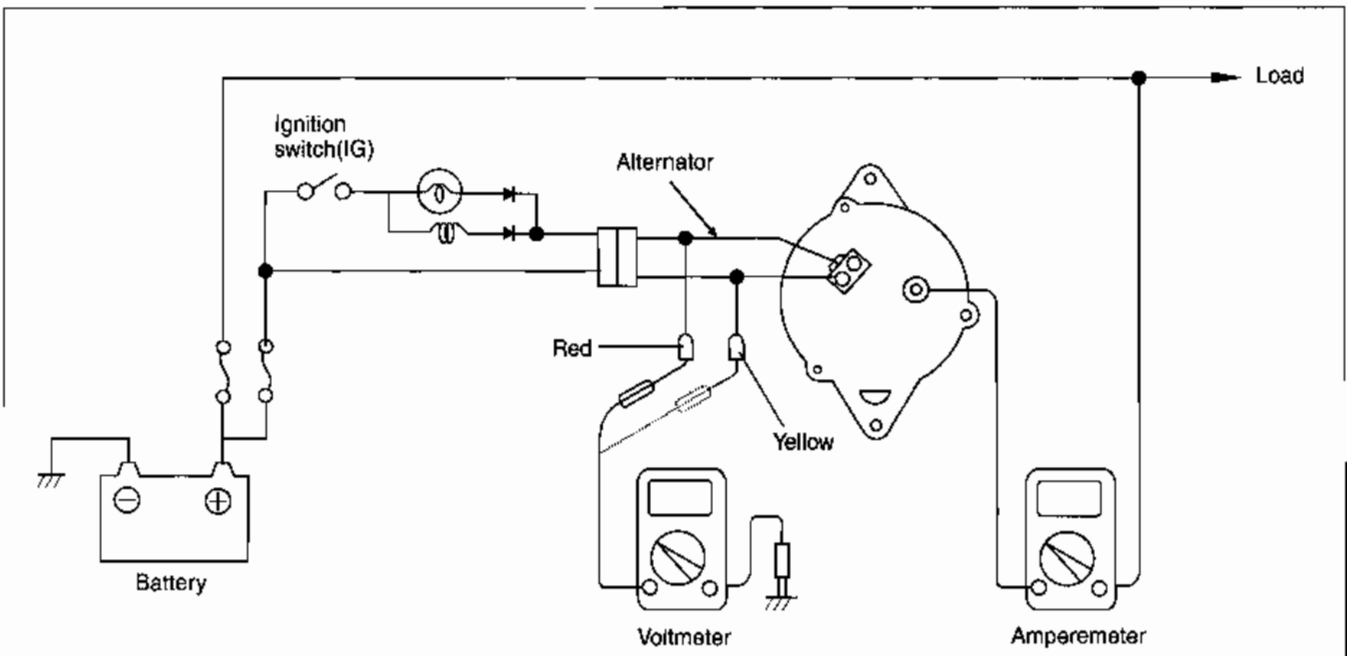

Regulated voltage test

KD4B6005

2. Check as the following procedures.

No.	Check item	Operation	Determination		Cause	Remedy
			Normal	Abnormal		
1	Voltage between L terminal and earth	Ignition switch: OFF	0V	Voltage arises	Abnormal wiring or alternator	Correct wiring or repair alternator
		Ignition switch: ON	2~5V	0V		
				Battery voltage	Faulty ALTR	Repair ALTR
2	Voltage between S terminal and earth	Ignition switch: OFF	Battery voltage	0V	Short wiring or fusable link	Correct wiring or replace fusable link
		Ignition switch: ON				
3	Voltage between S terminal and earth (regulator adjust voltage)	Run the engine and keep the engine at 2000~3000rpm.	14.4 ±0.5V (At 20°C)	Highly exceed the standard value	Abnormal IC regulator	Repair ALTR
				Below the standard value	If the output current is 5A or more	fully charge the battery.
					If the output current is 5A or less, the alternator is abnormal.	Repair ALTR

NOTE

- ***Adjust voltage becomes slightly low in proportion to the output current, so it is inspected with low output current (approx. 5A or less) of IC regulator.***
- ***Adjust voltage varies according to the IC regulator surrounding temperature, so refer to the characteristics as shown in the left figure.***
- ***If the battery may be discharged or the head lamp is overloaded, the current reads 5A or more. Recheck the battery lamp this time.***

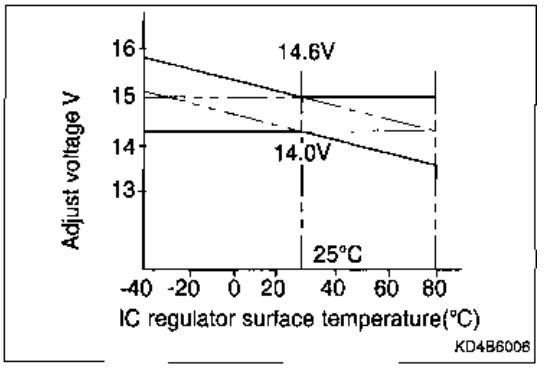

CURRENT OUTPUT TEST

1. Remove battery ground cable.
2. Remove alternator outlet line from alternator "B" terminal. Connect 0-100A test ammeter DC between "B" terminal and remove outlet line in series.
3. Connect a voltmeter (0 to 20V) between the "B" terminal and ground.
4. Attach an engine tachometer.
5. Check that the values on voltmeter and battery are the same. 0V is caused by a disconnected wire between the alternator "B" terminal and battery (+), or a blown fusible link, or defective ground.
6. With headlamp switch ON, start engine. Set headlamps at high beam and heater blower switch to HIGH. Increase engine speed to 2500 rpm and read the maximum output current on the ammeter.

Limit	70% of nominal output current

NOTE
Read the maximum value quickly as charged current drops repidly. Nominal output current value is indicated on a plate on the alternator.

7. The value on the ammeter should be over the limit value. When the value is under the limit and the alternator outlet wiring [between alternator "B" terminal and battery (+) terminal] is normal, remove the alternator for inspection.

NOTE
Having headlamps on when checking alternator output current increases the load. Standard current is generated at low speed of alternator. However, output current is stabilized at about 4000rpm alternator speed.
Therefore, the output current at 2500 rpm engine speed exceeds the standard value, and the alternator can be considered as near normal.

8. Alternator output current changes due to load. Therefore, the standard output current may not be obtained due th small electric load despite the charging system being normal. In this case, increase the load and recheck.

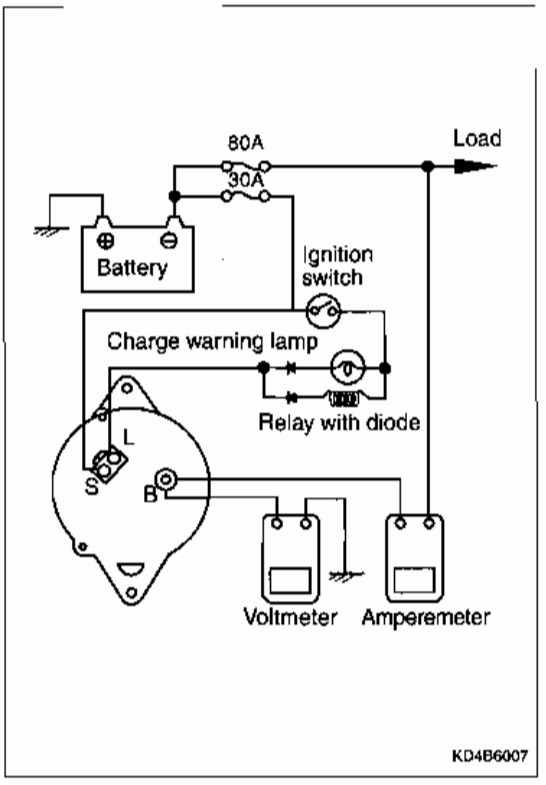

RESULT

1. After output current test, bring engine speed to idle.
   Turn ignition switch OFF.
2. Remove battery ground cable.
3. Remove ammeter, voltmeter and engine tachometer.
4. Connect alternator output line to alternator "B" terminal.
5. Connect battery ground cable.

6. ALTERNATOR

COMPONENTS

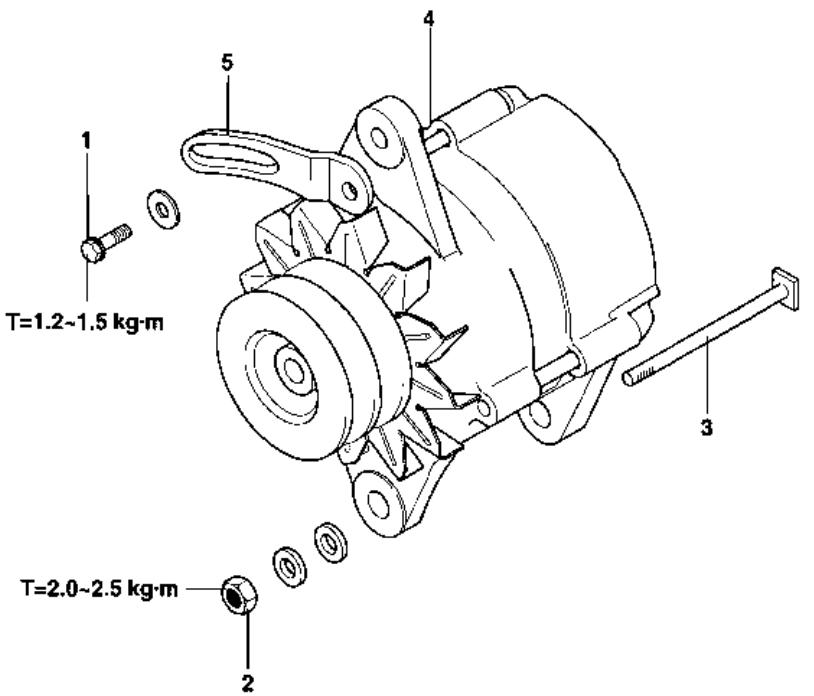

1. Lock bolt
2. Nut
3. Support bolt
4. Alternator assembly
5. Alternator brace

KD4B6008

INSTALLATION

ALTERNATOR ASSEMBLY

1. For belt tension, refer to Chapter 5 Engine-Service adjustment procedures.

COMPONENTS

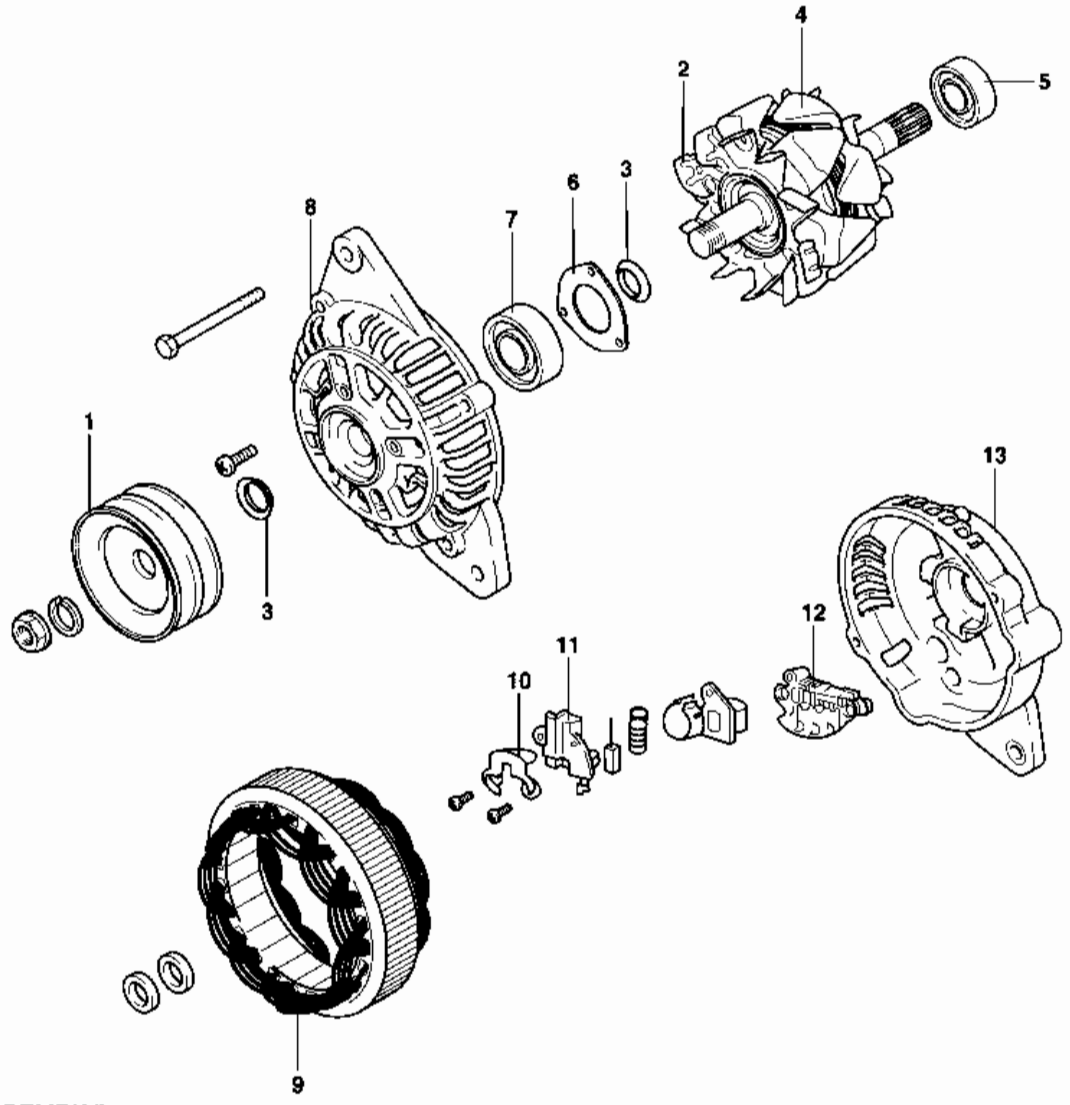

[DISASSEMBLY]

1. Pulley
2. Fan
3. Seal
4. Rotor & fan assembly
5. Rear bearing
6. Bearing retainer
7. Front bearing
8. Front bracket
9. Stator assembly
10. Plate
11. Regulator & brush holder
12. Rectifier assembly
13. Rear bracket

[Remarks]

Assembly is the reverse of disassembly

KD4B6009

DISASSEMBLY

FRONT BRACKET

1. With a screwdriver blade inserted between the front bracket and stator core, pry it to separate the stator and the front bracket.
2. If they are hard to separate, lightly strike the bracket with a plastic hammer while prying with the screwdriver.

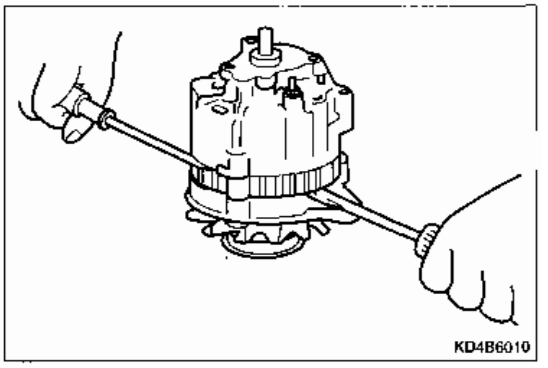

⚠ ***CAUTION***
Do not insert the screwdriver too deep as the stator core could be damaged.

STATOR ASSEMBLY, RECULATOR AND BRUSH HOLDER

1. When removing the stator, unsolder the three stator leads from the main diodes.
2. When removing the rectifier from the brush holder, unsolder two soldered points.

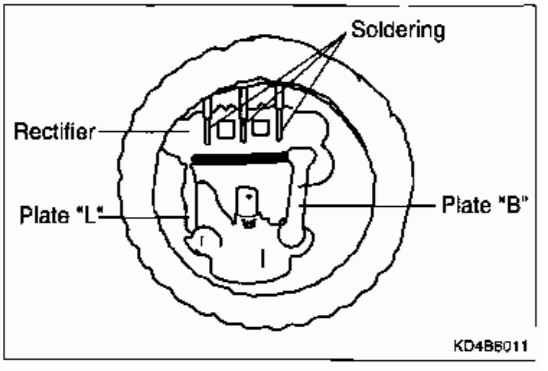

⚠ ***CAUTION***
- ***When soldering or unsoldering, use care not to expose the diode to soldering iron heat for extended time. Complete soldering or unsoldering in as short a time as possible.***
- ***Do not overstress the diode leads.***

INSPECTION

ROTOR

1. Check the rotor coil continuity. Make sure that there is continuity between slip rings. Measure the rotor resistance. If it is excessively small, it indicates a shorted rotor, If without continuity or shorted, replace the rotor assembly.

Standard value	3 - 5 ohms

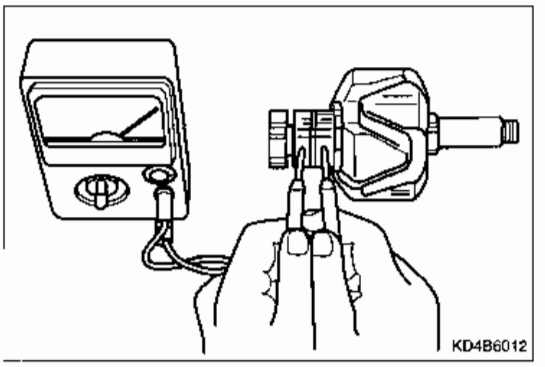

2. Check the rotor coil grounding. Make sure that there is no continuity between the slip ring and core. Replace the rotor assembly if there is continuity.

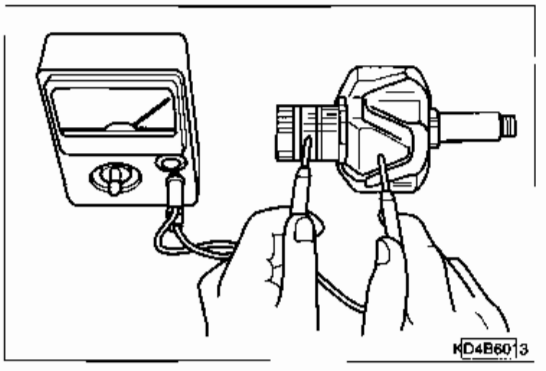

STATOR

1. Check the stator continuity. Make sure that there is continuity between coil leads. Replace the stator assembly if there is no continuity.

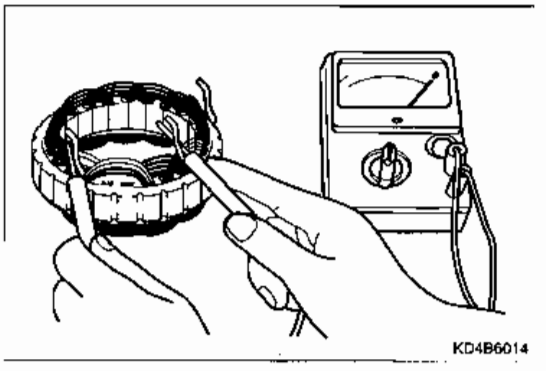

2. Check the coil grounding. Make sure that there is no continuity between the coil and core. Replace the stator assembly if there is continuity.

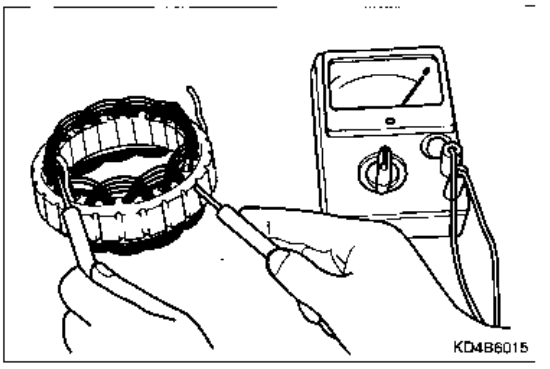

RECTIFIER

1. **Inspection of (+) Heat Sink Assembly**
   Using a circuit tester, check continuity between the (+) heat sink and the stator coil lead connection terminals. If there is continuity in both directions, the diode is shorted. Then, replace the rectifier assembly.

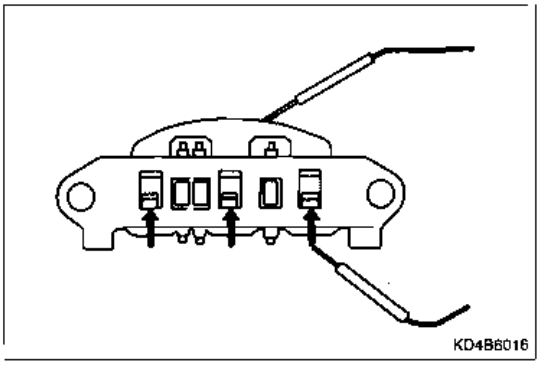

2. **Inspection of (-) Heat Sink Assembly**
   Check continuity between the (-) heat sink and the stator coil lead connection terminals. If there is continuity in both directions the diode is shorted. Then, replace the rectifier assembly.

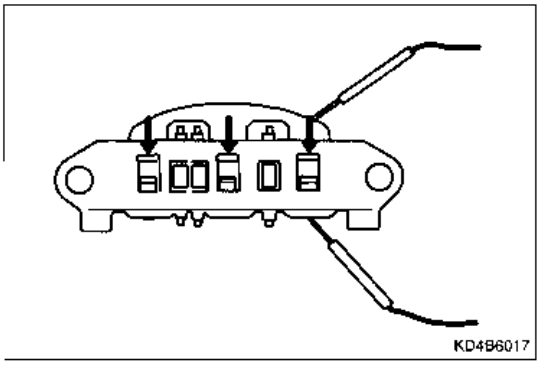

3. **Inspection of Diode**
   Trio With a circuit tester connected to both ends of each diode, check continuity of the three diodes. If there is continuity or no continuity in both directions, the diode is damaged. Then, replace the rectifier assembly.

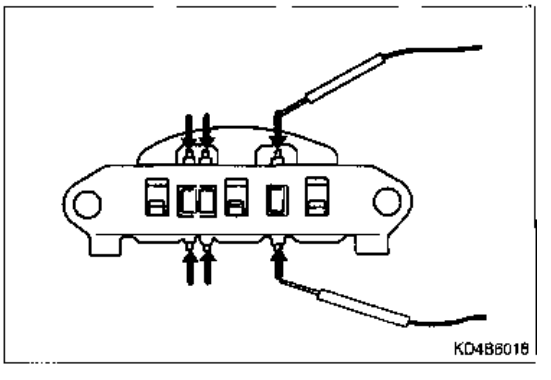

BRUSH

1. The brush must be replaced if worn to the wear limit line.

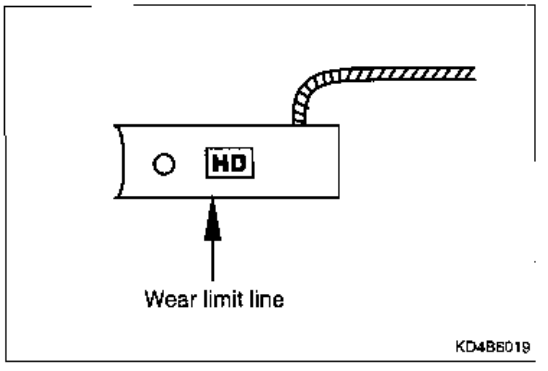

2. Unsolder the brush lead wires, and the brush and spring will come out.

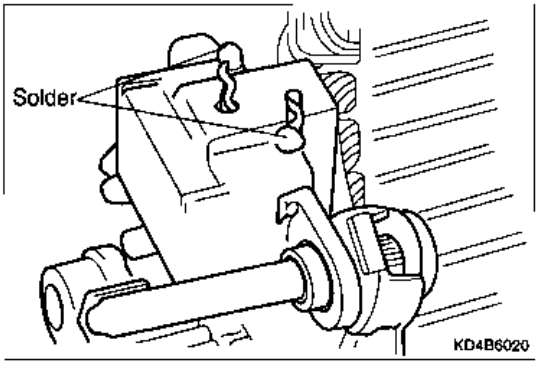

3. When installing a new brush, push the brush into the holder as illustrated and solder the leads.

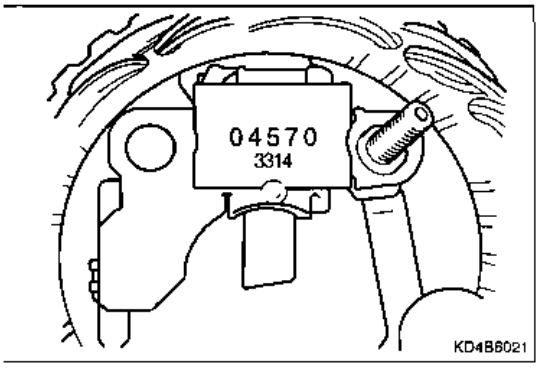

REASSEMBLY

ROTOR ASSEMLY

1. Before installing the rotor on the rear bracket, thread a steel wire through the small hole provided in the rear bracket to lift up the brush. After rotor installation, remove the steel wire.

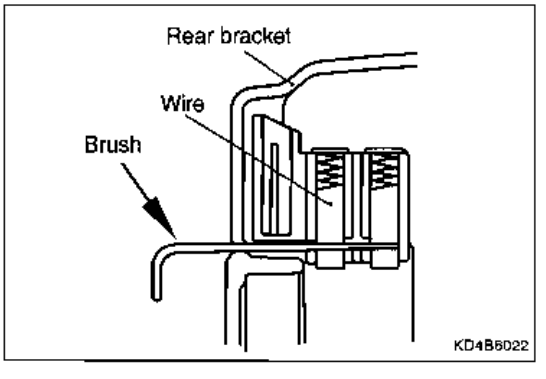

7. STRATER MOTOR

COMPONENTS

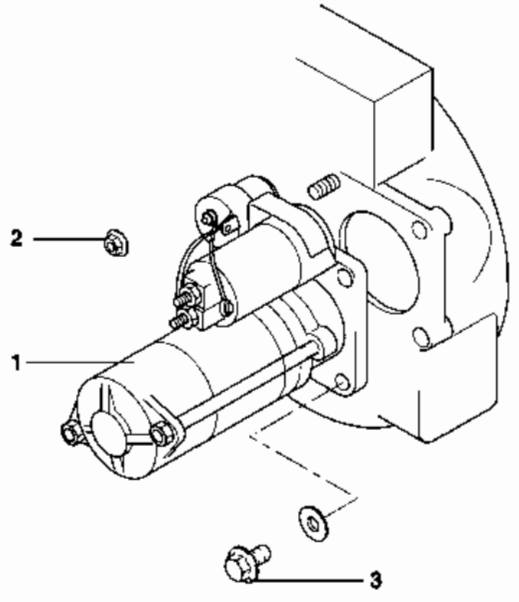

1. Starter motor
2. Nut
3. Bolt

REMOVAL

Remove the starter at the engine room lower portion.

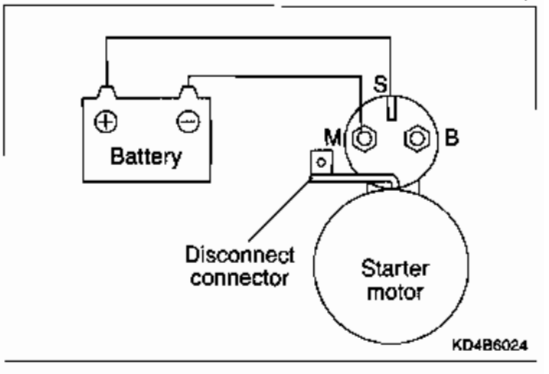

INSPECTION

PINION GAP ADJUSTMENT

1. Disconnect the field coil wire from the terminal M of the magnetic switch.
2. Connect at 12V battery the terminal S and the terminal M.

   ⚠ ***CAUTION***
   This test must be performed quickly within 10 seconds to prevent the switch coil from burning.

3. When the battery is connected, the pinion moves out. Now, push back the pinion with a finger and measure the pinion stroke (the travel along which the pinion is pushed back). This is the pinion gap.
4. If the pinion gap is not up to specification, adjust by adding or removing fiber washers between the magnetic switch and front bracket. Using more washers makes the gap smaller.

Pinion gap	0.2 ~ 2.0 mm

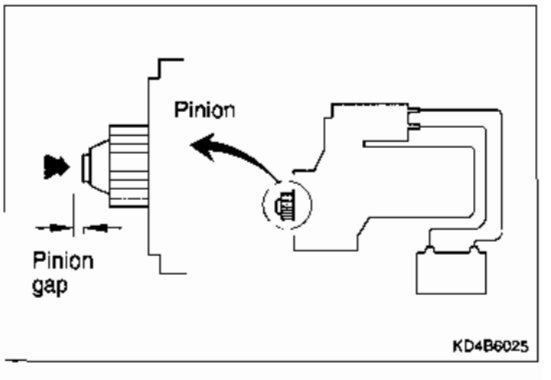

PULL-IN TEST OF MAGNETIC SWITCH

The pull-in coil is in good condition if the plunger is pulled in to cause the pinion to move out when a battery is connected between the terminals S and M of the magnetic switch. If the pinion does not move out, replace the magnetic switch.

⚠ ***CAUTION***

- ***The connector must be disconnected from terminal M for this test.***
- ***The test must be finished within 10 seconds.***

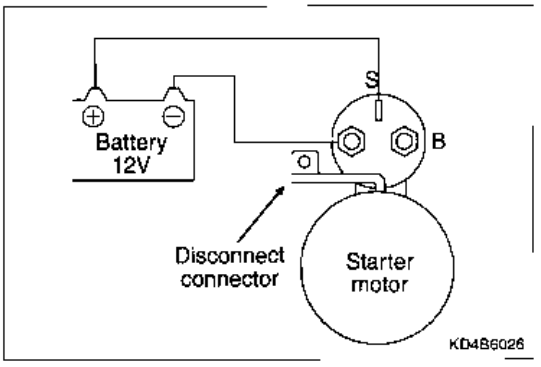

HOLD-IN TEST OF MAGNETIC SWITCH

With a battery connected between the terminal S and body of magnetic, manually pull the pinion up to the pinion stopper. The hold-in coil is in good condition if the pinion remains out when releasing it.

⚠ ***CAUTION***

This test must be completed with 10 seconds.

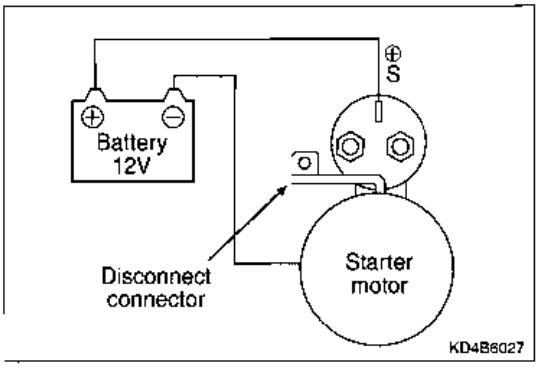

RETURN TEST OF MAGNETIC SWITCH

With a battery connected between the terminal M and body of the magnetic switch, manually pull the pinion out to the pinion stopper. Body coils are fully operational if the pinion returns immediately when releasing it.

⚠ ***CAUTION***

This test must be completed with 10 seconds.

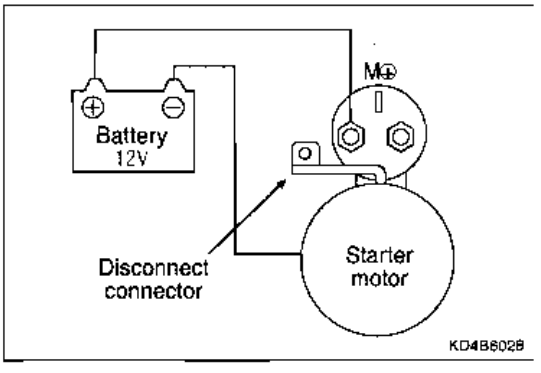

NO-LOAD TEST

1. Set up a circuit as shown which connects a starter motor, battery, ammeter, voltmeter, and variable resistance.
2. The starting motor should be in good condition if it turns smoothly and steadily when the switch is turned ON with a maximum variable resistance value. Adjust the variable resistor so that the voltmeter reads 11.5V. If the current and rpm are out of specification after this adjustment, troubleshoot according to the table below and take remedial action as required.

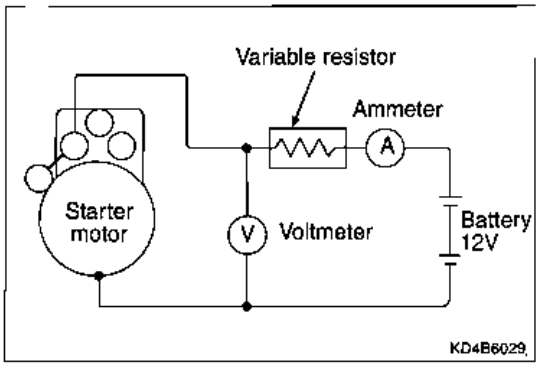

Symptom	Possible cause
Large current with low rpm (torque also being small)	• Contaminated bearing • Armature coil rubbing pole piece • Armature coil shorting
Large current with no rotation	• Solenoid switch grounding • Armature and field coil grounding • Seized bearing
No current flowing with no rotation	• Broken armature and field coils • Broken brush and pigtail • Improper contact between brush and commutator
Small current with low rpm (torque also being small)	• Improper field coil connection (Note, however, that open or improperly connected shunt coil only will result in high rpm.)
Large current with high rpm (torque being small)	• Shorted field coil

COMPONENTS

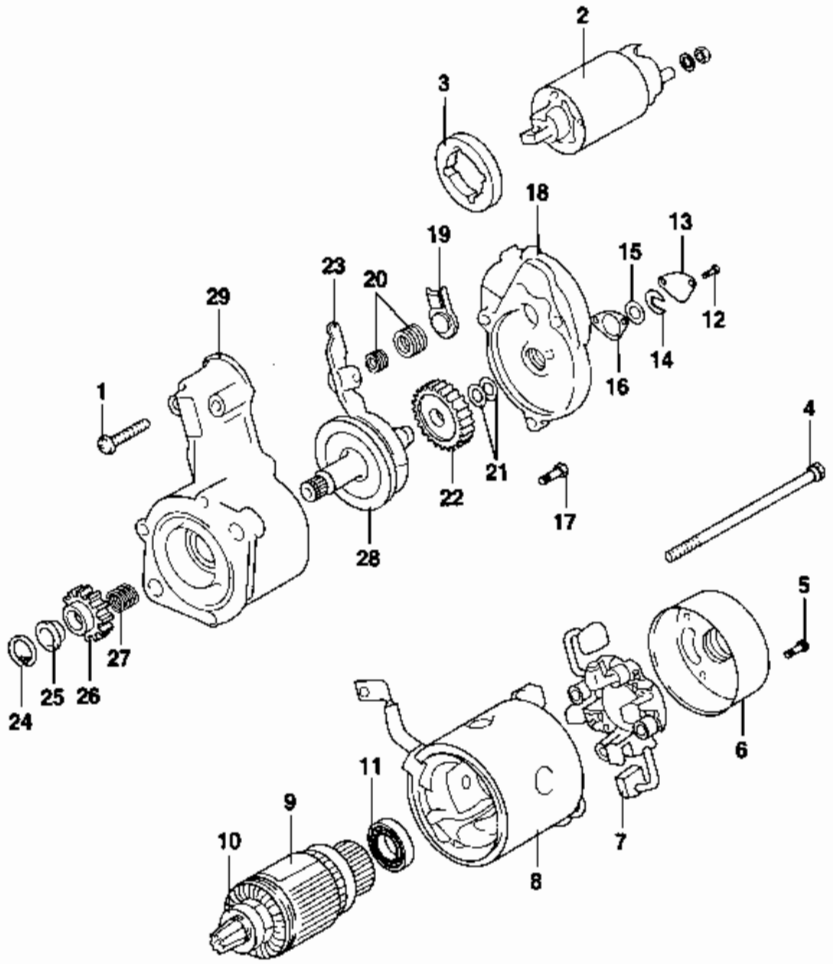

1. Screw
2. Magnetic switch
3. Fiber washer
4. Screw
5. Screw
6. Rear bracket
7. Brush holder assembly
8. Yoke assembly
9. Armature
10. Front bearing
11. Rear bearing
12. Screw
13. Cover
14. Snap ring
15. Washer
16. Plate
17. Screw
18. Center bracket
19. Packing
20. Lever spring
21. Washer
22. Gear
23. Lever
24. Snap ring
25. Stop ring
26. Pinion gear
27. Spring
28. Pinion shaft assembly
29. Front bracket

[Remarks]

Assembly is the reverse of disassembly

KD4B6030

DISASSEMBLY

MAGNETIC SWITCH

Remove the field coil wire from the terminal M of magnetic.

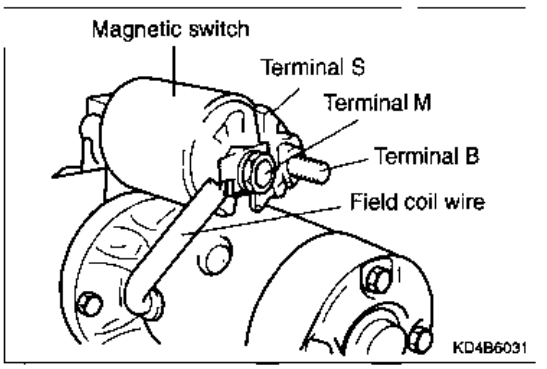

SNAP RING

Measure the pinion shaft end play using the feeler gauge for the purpose of reassembly.

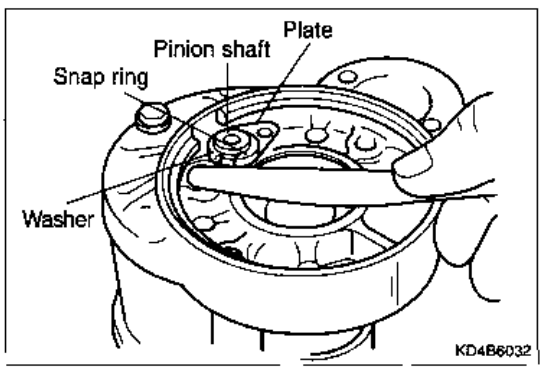

SNAP RING AND STOP RING

1. Using an adequate socket, push the stop ring over the snap ring.

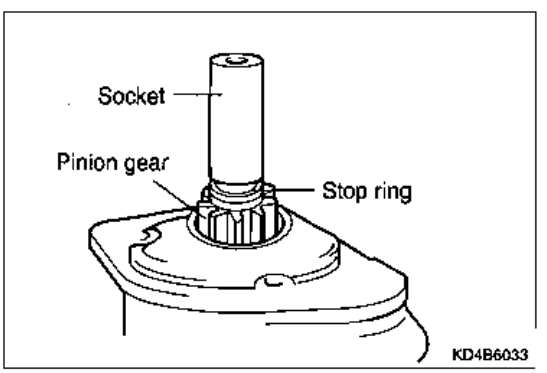

2. Remove the snap ring with a screwdriver, then, remove the stop ring.

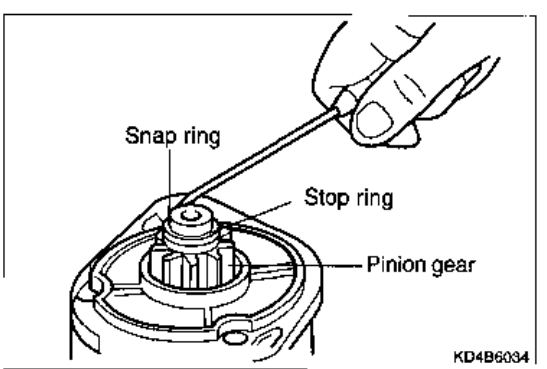

CLEANING THE STARTER MOTOR PARTS

1. Do not immerse parts in cleaning solvent. Immersing the yoke and field coil assembly and/or armature will damage the insulation. Wipe these parts with a cloth only.
2. Do not immerse the drive unit in cleaning solvent. The over-run clutch is pre-lubricated at the factory and solvent will wash lubrication from the clutch.
3. The drive unit may be cleaned with a brush moistened with cleaning solvent and wiped dry with a cloth.

INSPECTION

CHECKING THE COMMUTATOR

1. Place the armature on a pair of V-blocks, and check the run - out by using a dial gauge.

Standard value	0 ~ 0.03mm
Limit	0.1mm

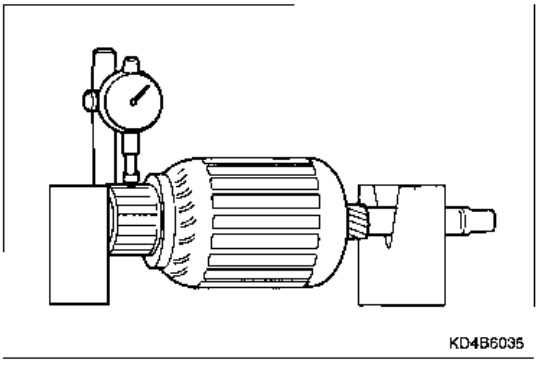

2. Check the outer diameter of the commutator.

Standard value	32 ±0.1mm
Limit	31.4mm

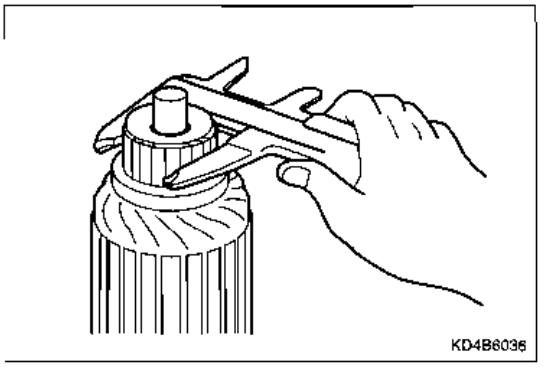

3. Check the depth of the undercut between segments.

Standard value	0.5mm
Limit	0.2mm

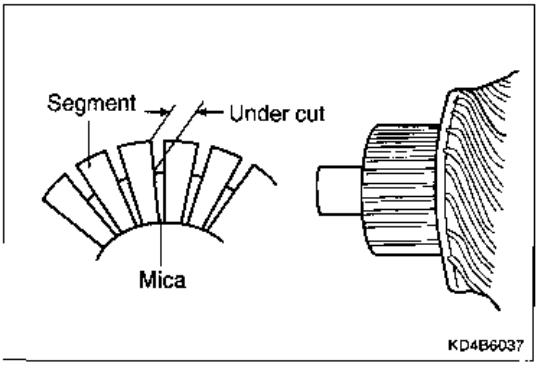

FIELD COIL OPEN-CIRCUIT TEST

Check for condinuity between field brushes.
There must be continuity.

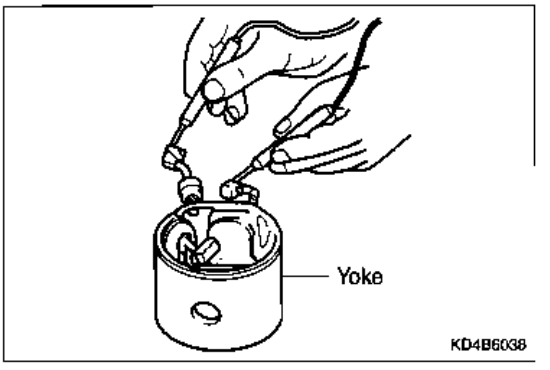

FIELD COIL GROUND TEST

Check for continuity between the field coil brush and yoke.
There must be no continuity.

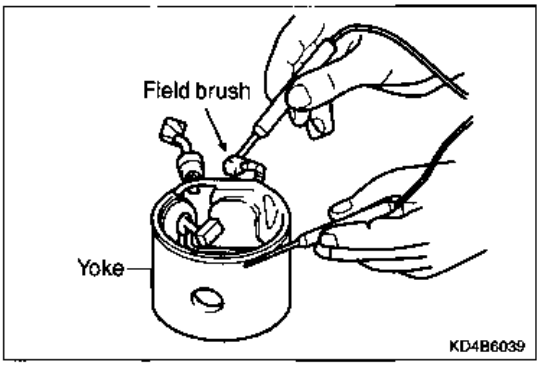

BRUSH HOLDER

Check for continuity between brush holder plate and brush holder.
There must be no continuity.

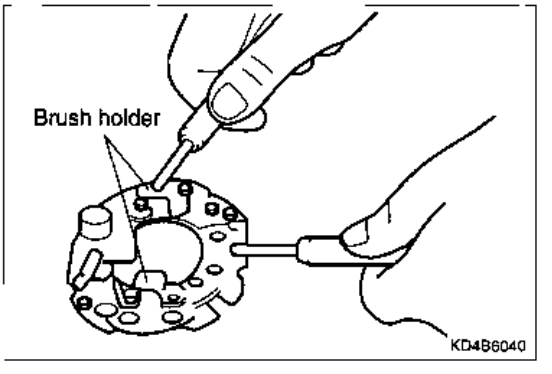

OVERRUNNING CLUTCH

1. Ensure that the pinion locks when turned counterclockwise and turns freely when turned clockwise.
2. Check the pinion for wear and damage.

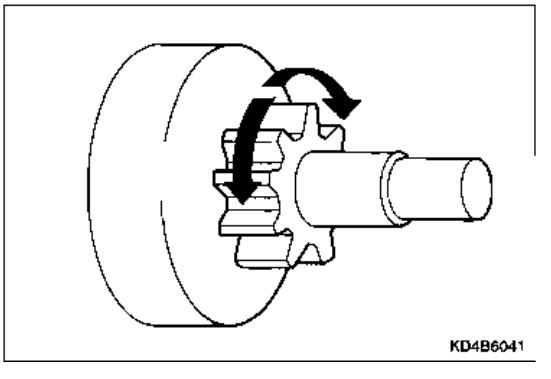

BURSHES

1. Check the brush surface in contact with the commutator for surface roughness. Check also the brush length.

Limit	Wear limit line

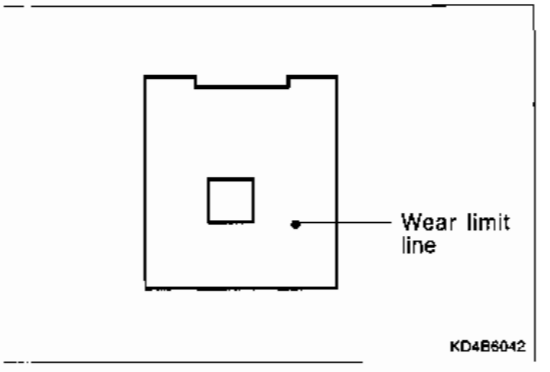

2. If the surface has been refaced or brush has been replaced, wrap sand paper around the commutator to correct its surface.
3. When removing a worn brush by breaking with pliers, use care to prevent damage to the pigtail.
4. Polish the pigtail end for battery soldering with sand paper.
5. Insert the pigtail into the hole in a new brush and solder. Make sure that the brush surface is free from excess solder.

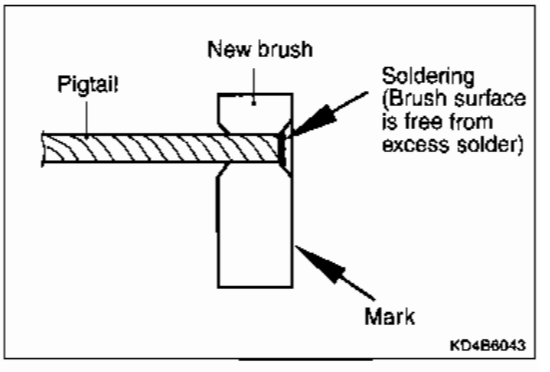

ARMATURE COIL SHORT TEST

1. Place the armature on a growler.
2. Slowly turn the armature while a thin metal is held above it. The armature coil is not shorted if the metal does not vibrate.

⚠ ***CAUTION***
Before this test, ensure that the armature surface if free from foreign substances.

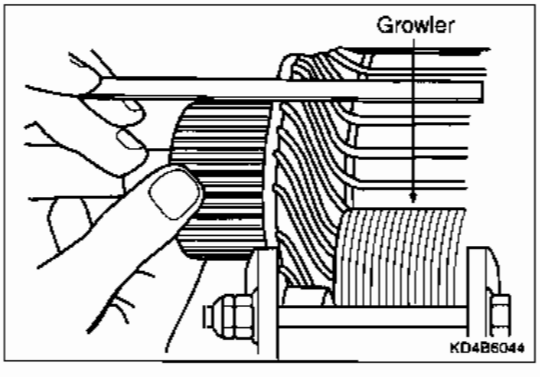

ARMATURE COIL GROUND TEST

Check for insulation between the commutator segment and armature coil core. There must be no continuity.

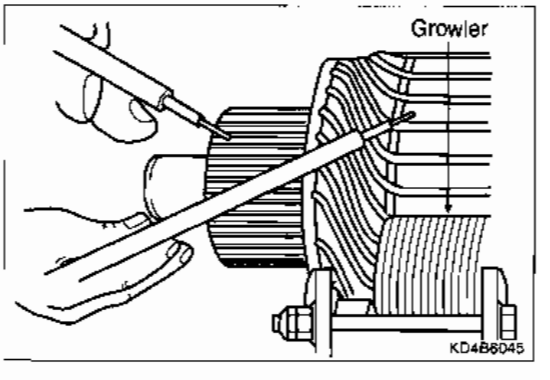

ARMATURE COIL OPEN-CIRCUIT TEST

Check for continuity between segments. There must be continuity.

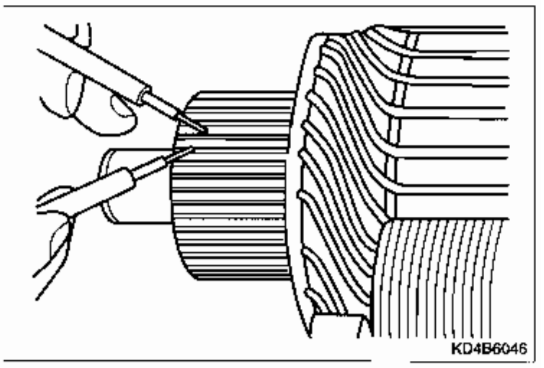

INSTALLATION

STOP RING AND SNAP RING

Using a puller of adequate type, pull the stop ring over the snap ring.

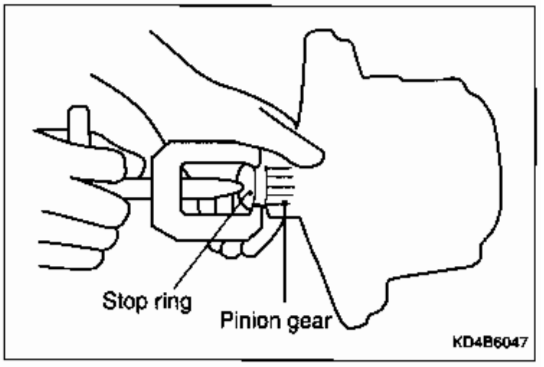

8. GLOW PLUG

COMPONENTS

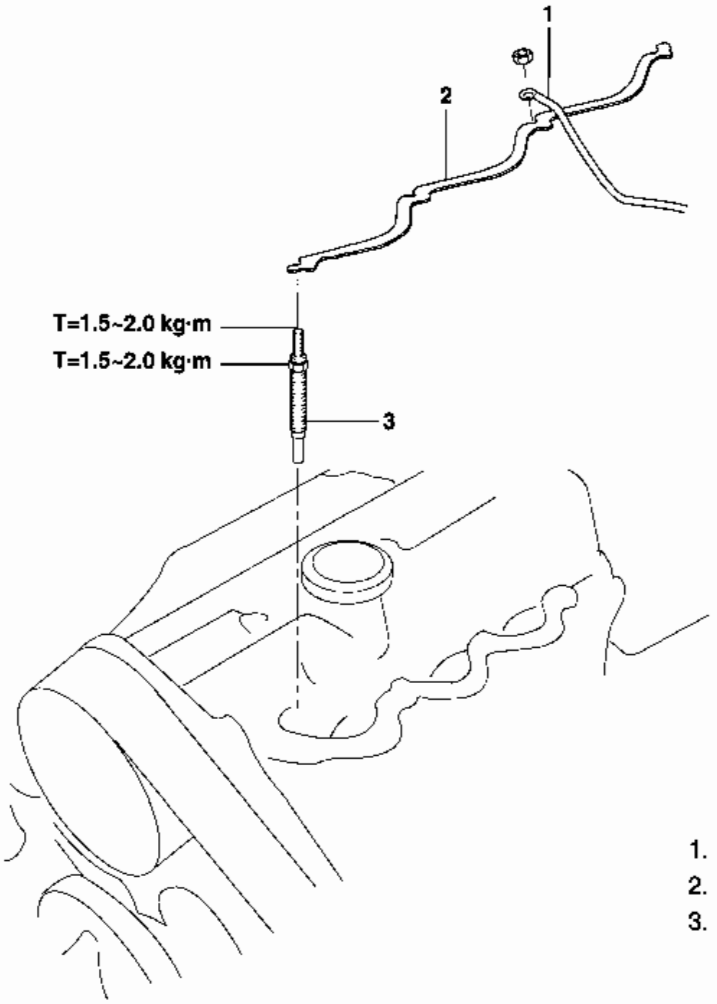

REMOVAL

GLOW PLUG

Especially ceramic part of glow plug is so fragile that the screw should be removed with the hand after unscrewing it several turns with a tool.

INSPECTION

1. Check for rust on glow plug plate.
2. Check glow plug for damage.

NOTE
Do not use the plug dropped at the height of 10cm or higher.

3. Check the continuity between the terminal and body as illustrated. Replace if discontinuity or with large resistance.

Standard value	500Ω(20°C)

NOTE
Remove oil from plug before measuring as glow plug resistance is very small.

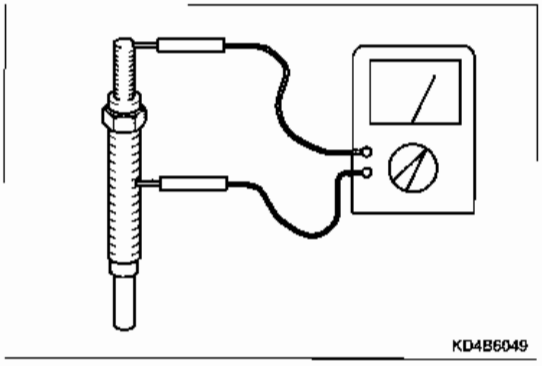

INSTALLATION

GLOW PLUG

Especially ceramic part of glow plug is so fragile that the screw should be removed with the hand after unscrewing it several turns with a tool.

CHAPTER 7. FUEL SYSTEM

1. GENERAL 7- 1

2. INJECTION NOZZLE 7- 8

3. INJECTION NOZZLE HOLDER 7- 10

4. INJECTION PUMP 7- 12

5. TROUBLESHOOTING 7- 15

1. GENERAL IMFORMATION

OVERALL

A distribution-type fuel injection pump is installed in the front upper case and is driven by the timing belt. The fuel is drawn from the fuel tank by a pump inside the fuel injection pump and sent to the injection pump through a filter which contains a water separator. The fuel under pressure enters the pump chamber, where the fuel pressure is regulated by a regulating valve. From the pump chamber, the fuel is sent through the distributor head passage and then the inlet port in the barrel to the high pressure chamber above the plunger. The plunger pumps the fuel and the highly pressurized fuel is injected from the nozzle in accordance with the injection sequence. The excess fuel in the pump housing chamber is returned through the overflow valve and the overflow pipe to the fuel tank. The injection pump is cooled and lubricated by means of fuel circulation. The excess fuel at the nozzle holder is also returned through the overflow pipe with unions on the injection pump to the fuel tank. Since the injection pump is lubricated by fuel, water in the fuel will shorten the pump life to a great degree. Therefore, special care must be taken to prevent the entry of water, dust, etc. into the system.

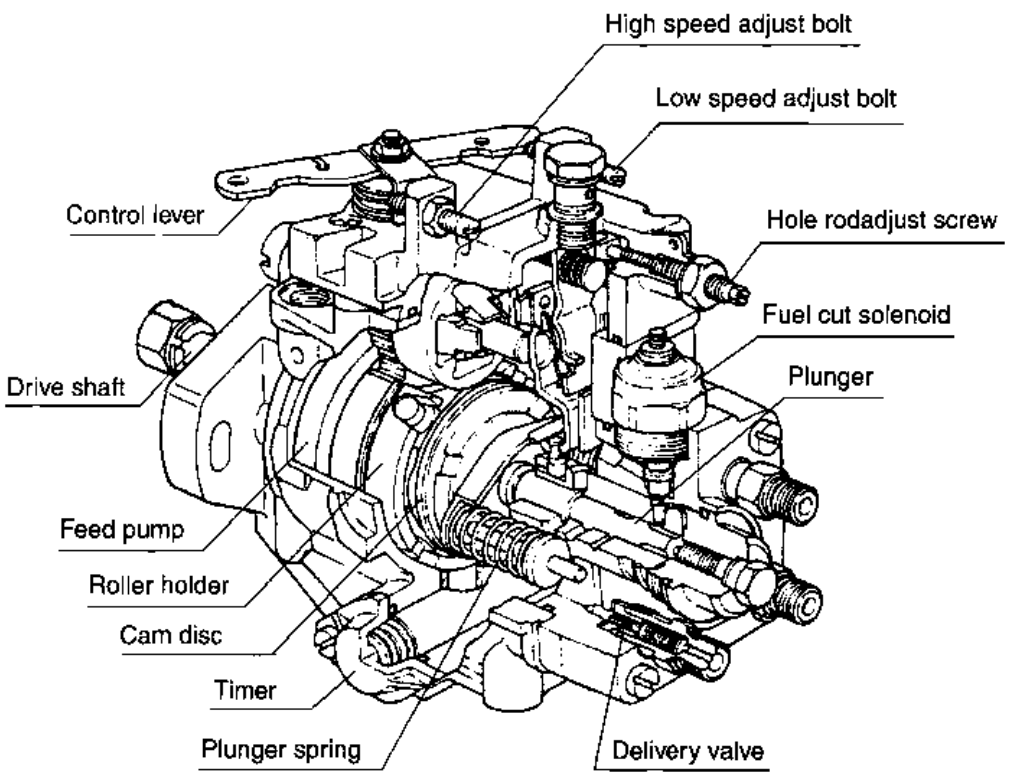

SPECIFICATIONS

Item		Specification	Remark
Fuel filter type		Cartridge paper filter element type	
Fuel injiction pump	Type	Distribution type	
	Turning direction	Clockwise as viewed from drive side	
	Injection sequence	1 - 3 - 4 - 2	
	Governor type	Half All Speed	
	Feed pump type	Vane type	
Injection nozzle	Nozzle type	Throttle type	
	Holder type	Screw-on type	

SERVICE SPECIFICATIONS

Item			Standard	Limit
Injiction pump	Injection timing		ATDC 5°	
	Cam lift		2.2mm	
	Plunger diameter		10mm	
	Delivery valve opening pressure		21.5kg/cm²	
	Fuel cut solenoid		12V/8Ω	
Injiction	Injection orifice (Number-diameter)		1 ~ 1.02mm	
	Pressure	Opening pressure	120kg/cm²	110kg/cm²
		Adjust pressure	125 ~ 135kg/cm²	
	Idle speed		820 ~ 880rpm	

TOQUE SPECIFICATIONS

Item	Torque (kg·m)
Injection pipe clamp bolts	0.4 ~ 0.6
Injection pipe union nuts	2.3 ~ 3.7
Pump bracket-to-cylinder block bolts	1.8 ~ 2.5
Injection pump-to-pump bracket bolts	2.0 ~ 2.7
Injection pump mounting nuts	1.5 ~ 2.2
Fuel return pipe nuts	3.0 ~ 4.0
Injection nozzle	5.0 ~ 6.0
ning nut-to-nozzle body	3.0 ~ 5.0
Pump sprocket nut	8.0 ~ 9.0

SPECIAL TOOLS

Tool (Number and name)	Illustration	Use
09310-43000 Prestroke measuring adapter	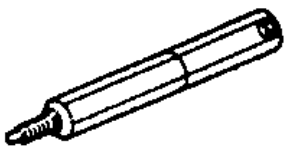 D1043000	Injection timing adjustment
09314-43100 Nozzle holder socket wrench	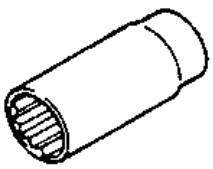 D1443100	Removal of nozzle holder
09314-43000 Injection pump sprocket puller	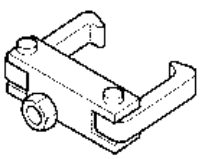 C1443000	Removal of injection pump sprocket

INSPECTION AND ADJUSTMENT

ACCELERATOR CABLE

1. Warm engine until stabilized at idle.
2. Confirm idle rpm is at prescribed rpm.
3. Stop engine.
4. Confirm there are no sharp bends in accelerator cable.
5. Check inner cable for correct slack.
6. If there is too much slack, adjust slack by the following procedures.
   1) Loosen adjusting nut. Fully close throttle lever.
   2) Tighten adjusting nut until throttle lever just starts moving. Return 1 turn and lock with lock nut. This adjusts accelerator cable play to standard value.

Standard value	approx. 1 mm (0.04 in.)

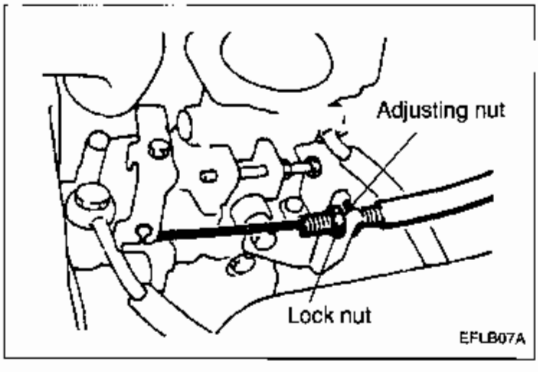

   3) Adjust so that accelerator pedal stopper touches pedal arm when throttle lever is fully opened.
   4) After adjusting, confirm that throttle level fully opens and closes by operating pedal.

EVACUATION OF AIR FROM FUEL LINE

1. When fuel is drained and re-filled for service.
2. When fuel filter is replaced.
3. When main fuel line is removed.
   1) Loosen fuel filter air plug.
   2) Place rags around air plug hole. Operate hand pump repeatedly until no bubbles come from plug hole. Tighten air plug.
   3) Repeat until hand pump operation becomes stiff.

EVACUATION OF WATER FROM FUEL FILTER

Water is in the filter when fuel filter indicator lights. Evacuate water by the following procedures.

1. Loosen drain plug.
2. Drain water with hand pump. Finger-tighten drain plug.

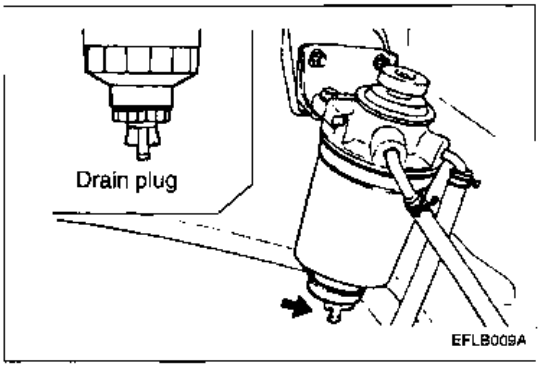

INJECTION NOZZLE

INJECTION START PRESSURE

1. Set injection nozzle in nozzle tester and check the following.
2. Move nozzle tester handle at about one stroke per second.
3. The pressure gauge pointer rises slowly and swings when injection is made. Read the position at which the pointer started to swing. Check the injection start pressure is the standard value.

Standard value	Opening pressure	120kg/cm²
	Adjust preesure	125~135kg/cm²
Limit		112kg/cm² or more

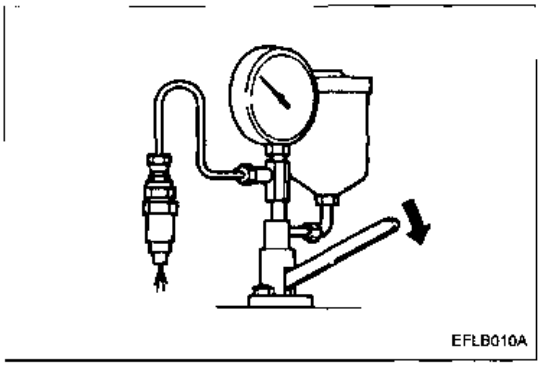

4. If the nozzle is faulty, disassemble and adjust injection start pressure to the standard value by changing the shim thickness. Injection pressure increases by approx. 1,000 kPa (10 kg/cm²,142 psi) as shim thickness is increased by 0.1 mm (0.0039 in.).

⚠ ***CAUTION***
When disassembling nozzle holder, be careful not to allow entry of dirt or water.

5. If the injection start pressure can not be adjusted by changing the shim thickness, replace nozzle assembly.

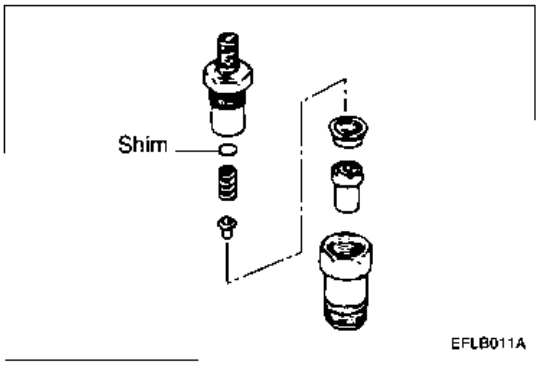

INJECTION STATUS

Move nozzle tester handle at about 1 stroke per second.

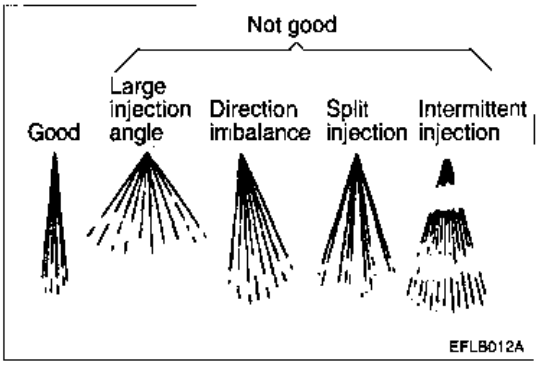

NEEDLE VALVE VIBRATION

Inject on is normal if the characteristic intermittent sound is heard as the handle is operated, and vibration of the needle valve is felt at the handle.

SPRAY

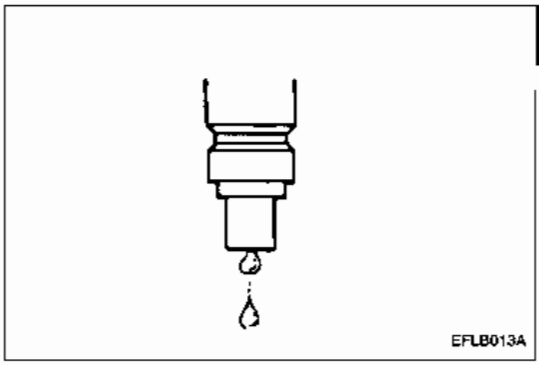

1. Check that the spray is good, as illustrated in the figure, in the test, the spray may be bolt shaped with a course mist and fuel may remain. This is phenomenon common in this type of inspection, and the nozzle function is normal.
2. Move nozzle tester handle at 4 to 6 strokes per second.
3. Confirm the spray is cone shaped with an angle of about 15°. This indicates a good condition.
4. If the injection is not good, disassemble nozzle and replace nozzle tip or entire assembly.
5. Confirm fuel does not drip after injection.
6. If dripping, disassemble injection nozzle and replace nozzle tip or entire assembly.

NOZZLE OIL-SEAL

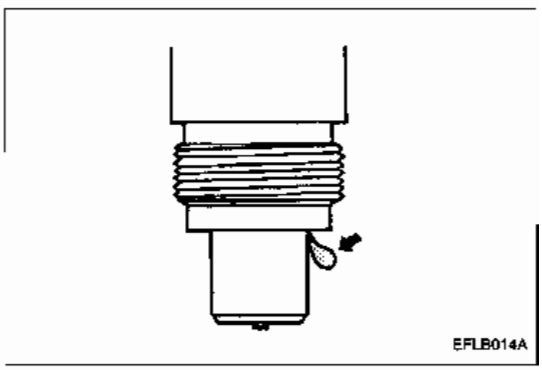

1. Maintain internal nozzle pressure (pressure gauge indication value) with the nozzle tester at 10,000-11,000 kPa (100-110 kg/cm², 1,422-1,565 psi). Check for fuel leaking from nozzle tip in this condition.
2. If there is leakage, disassemble injection nozzle and replace nozzle tip or entire assembly.

2. INJECTION NOZZLE

COMPONENTS

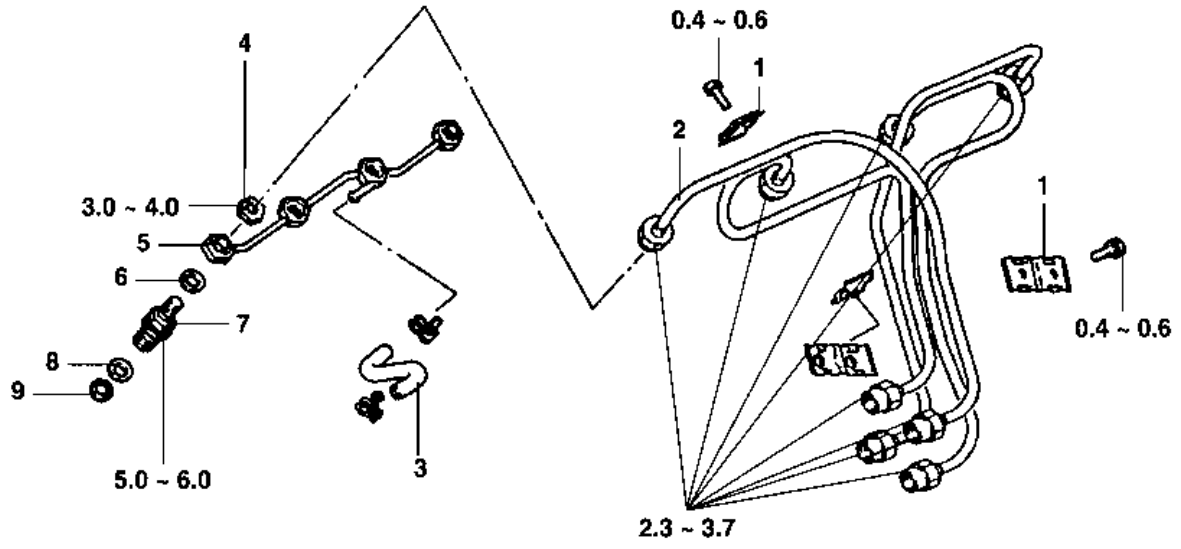

1 Injection pipe clamp
2 Injection pipe
3 Fuel return hose
4 Nut
5 Fuel return pipe
6 Fuel return pipe gasket
7 Nozzle holder
8 Holder gasket
9 Nozzle gasket

TORQUE : kg·m

EFLB015A

REMOVAL

1. Injection pipe
   When loosening the union nuts, hold delivery valve holder on fuel injection pump head or hexagon nut of fuel return pipe with a wrench to prevent it from rotating along with the union nut.

   ⚠ ***CAUTION***
   Because VE type injection pipe is different from DPC type injection pipe, be careful when you install. (VE type injection pipe is coated yellow)

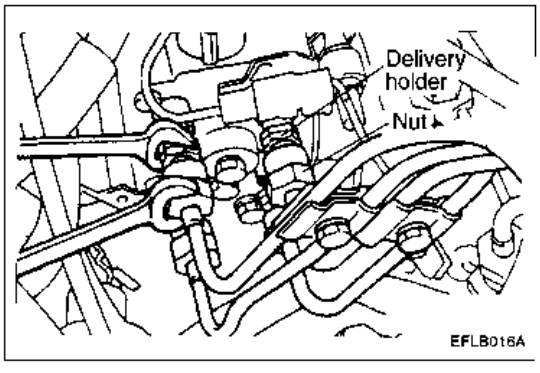

2. Fuel return pipe
   When removing the fuel return pipe nut, hold the fuel return pipe by the hexagon nut with a wrench.

   ⚠ ***CAUTION***
   If you remove the hexagon nut without holding the fuel return pipe nut, the pipe might be damaged. So you must remove the hexagon nut with holding return pipe.

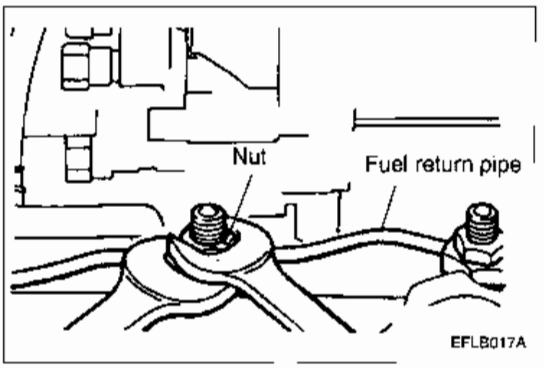

3. Return holder
   Using a deep socket wrench, loosen the injection nozzle and remove.

   ⚠ ***CAUTION***
   Write the number of the cylinder on the injection nozzle that has been removed. Cover the opening with an appropriate cap to prevent entry of dust, water and foreign material into the fuel passage land combustion chamber.

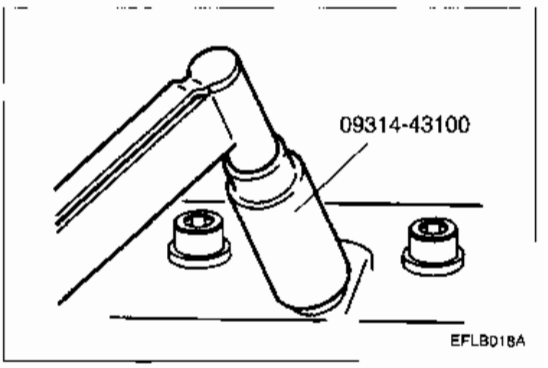

INSTALLATION

NOZZLE HOLDER

1. Clean nozzle holder installation area of the cylinder head.

   ⚠ ***CAUTION***
   Gasket groove may cause lack of idle RPM.

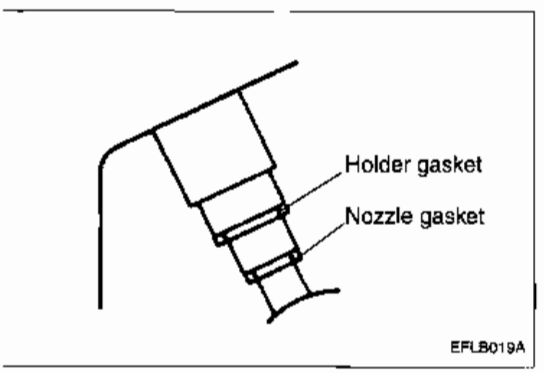

2. Fit a new nozzle gasket and holder gasket into the nozzle holder hole in the cylinder head.

3. INJECTION NOZZLE HOLDER

COMPONENTS

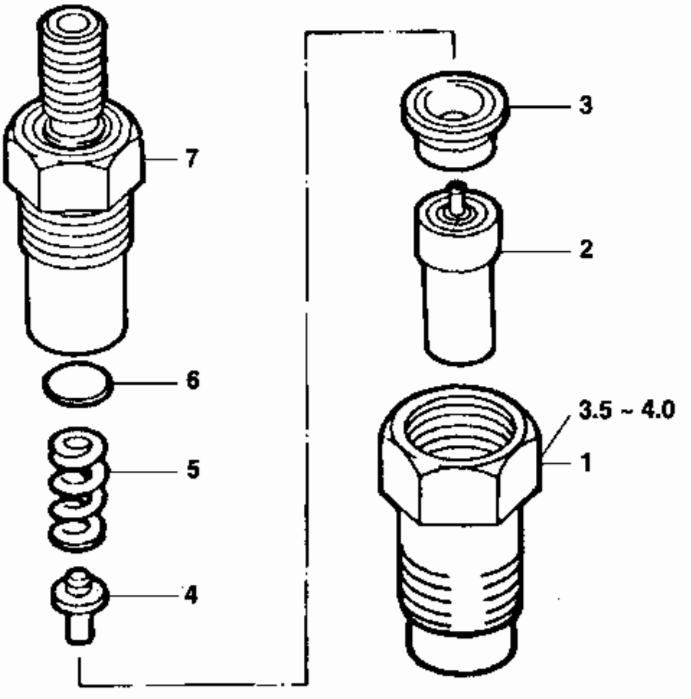

1 Retaining nut
2 Nozzle tip
3 Distance piece
4 Retaining pin
5 Pressure spring
6 Shim
7 Nozzle holder body

TORQUE : kg·m

EFLB020A

DISASSEMBLY

RETAINING NUT

1. Retaining nut Lightly clamp the retaining nut with a cushion bracket .
2. Hold the retaining nut with a box wrench, and loosen the nozzle holder body using a deep socket wrench.

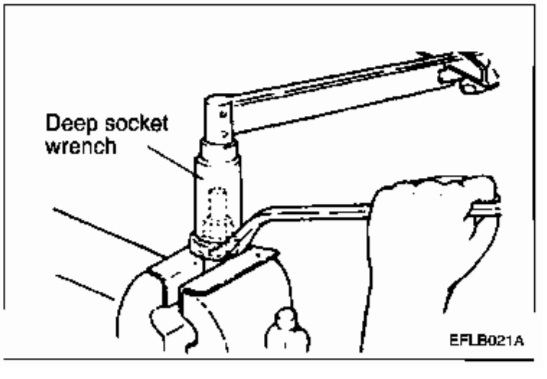

NOZZLE TIP

1. Check the nozzle tip for carbon deposits: Scrape off carbon deposits with a piece of wood land clean each part with patrol. After cleaning, keep parts submerged in diesel fuel. Take particular care to protect the nozzle tip needle valve from damage.
2. While the nozzle tip is submerged in diesel fuel, check that the needle valve slides smoothly. If the needle valve does not slide smoothly, replace the nozzle tip. When replacing the nozzle tip, completely wash off the anticorrosive oil from the new nozzle tip with clean diesel fuel before using it.
3. Check plunger tip "A" for deformation and breakage. If "A" is damaged or broken replace it. Check the surface in contact with the nozzle holder body by using minimum. Check spring for weakness and breakage.

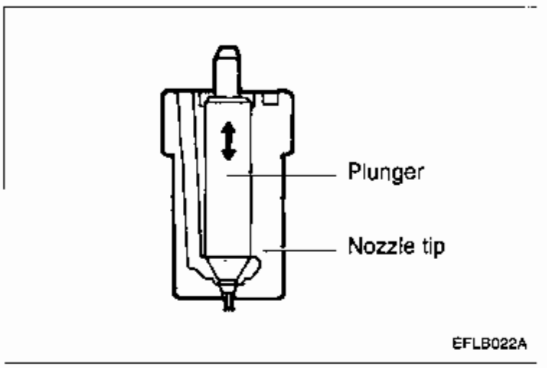

RETAINING NUT

1. Finger-tighten the nozzle holder body.
2. clamp the retaining nut in a vise with cushion plates.
3. While holding the retaining nut with a box wrench, tighten the nozzle holder body to the specified torque with a deep socket wrench.

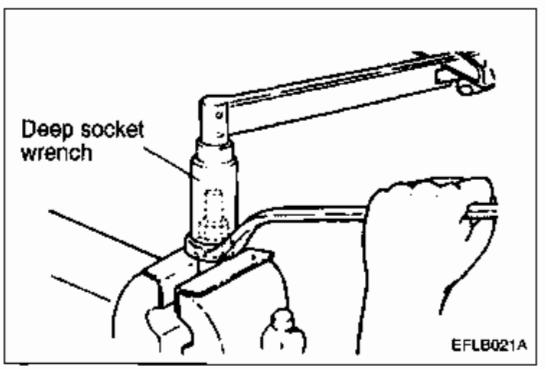

4. INJECTION PUMP

COMPONENTS

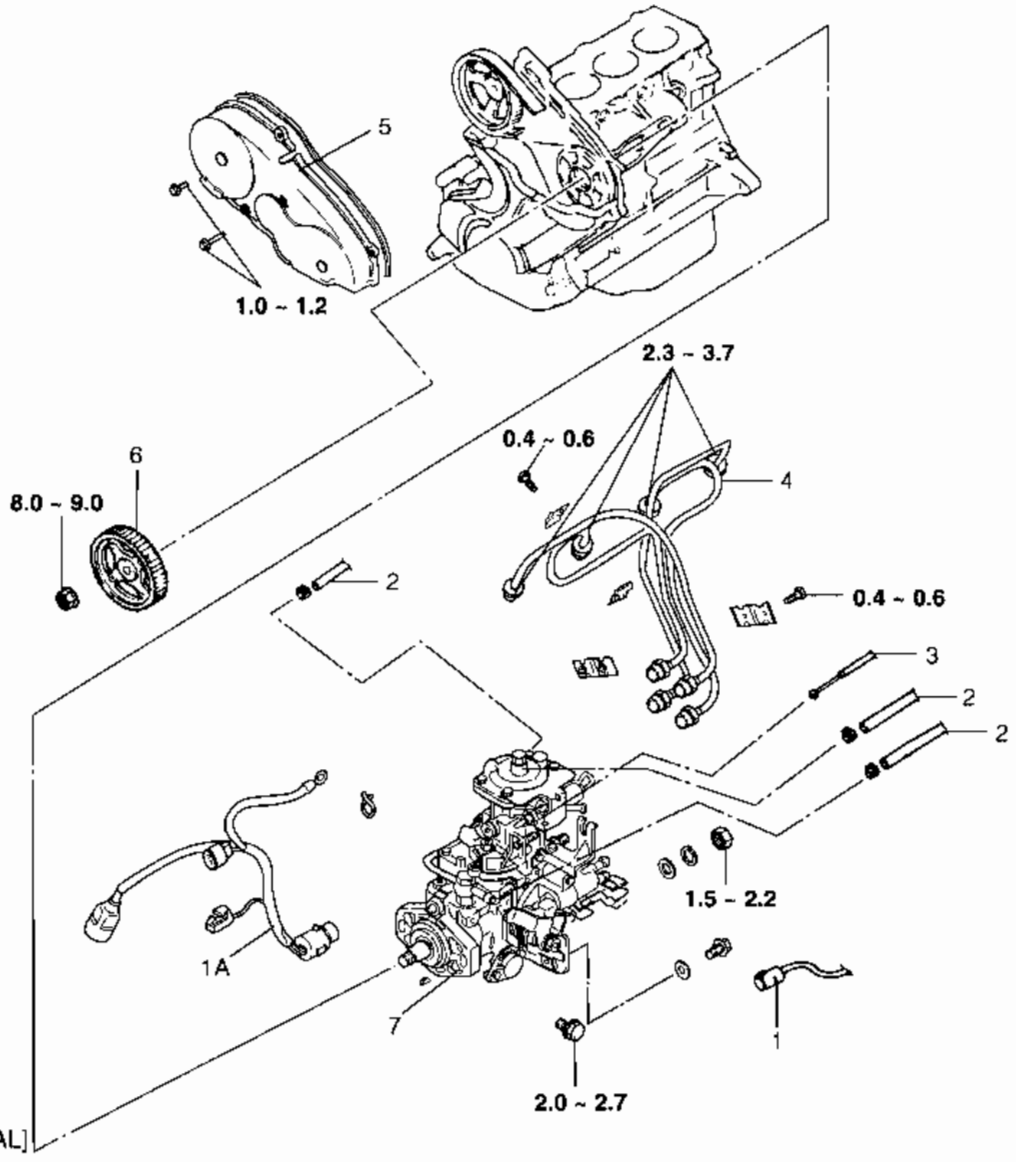

[REMOVAL]

1 Fuel injection pump connector
1A Electrical system connector
2 Fuel hose
3 Accelerator cable
4 Fuel injection pipe
5 Upper timming cover
6 Fuel injection pump sprocket
7 Fuel injection pump

[Remarks]
Assembly is the reverse of disassembly

TORQUE : kg·m

EFLB024A

REMOVAL

FUEL INJECTION PIPE

To remove the fuel injection pipe, refer to Injection nozzle

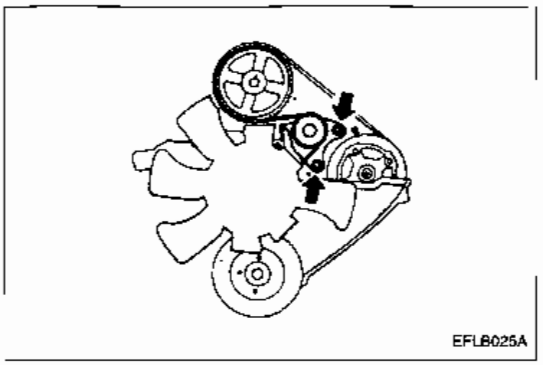

FUEL INJECTION PUMP SPROCKET

1. Rotate the crankshaft to place it to the first cylinder piston compression dead point.
2. Place the belt tensioner to the full loose position of timing belt..
3. After removing the sprocket mounting nut, remove the sprocket from the pump drive shaft using the special tool or equivalent puller.

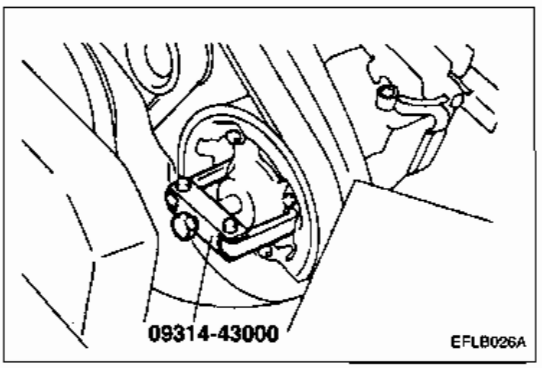

⚠ ***CAUTION***
Do not tap on the pump drive shaft with a hammer.

4. Leave the sprocket in the timing belt lower cover with the timing belt engaged.

⚠ ***CAUTION***
- ***Do not burden the timing belt with twist, bend, etc.***
- ***After removing, do not rotate the crank shaft.***
- ***When holding the injection pump, do not pull down the accelerator lever or fast idle lever.***
  Do not these levers. It may cause malfunction of the injection pump.

INSTALLATION OF FUEL INJECTION PUMP SPROCKET

When installing the sprocket to the injection pump, be sure the timing mark is aligned and tighten the nut to the specified torque.

⚠ ***CAUTION***
After installing the sprocket, adjust the belt tension. (Refer to Timing belt of EM group)

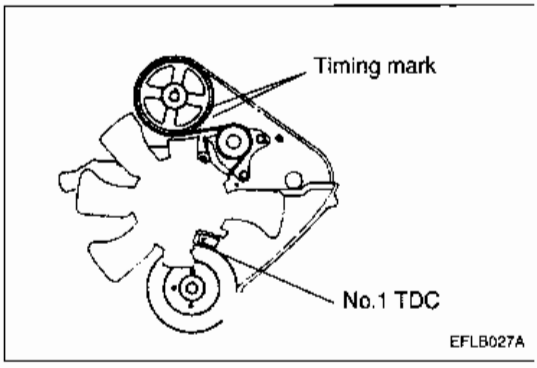

5. TROUBLESHOOTING

FUEL TANK AND FUEL LINE

Symptom	Probable cause	Remedy
Engine fault caused by low fuel supply	Bend and twist of fuel pipes and hoses	Correct or replace
	Fuel pipes and hoses clogged	Clean or replace
	Fuel filter clogged	Replace
	Water in fuel filter	Drain water from the fuel filter
	Air in fuel filter	Bleed the fuel filter
	Fuel tank inside damaged and rusted	Clean or replace
	Fuel pump fault	Replace

FUEL INJECTION SYSTEM

Symptom	Probable cause	Remedy
Engine does not start	No voltage at fuel cut-off solenoid on injection pump	Check for voltage with test light. If necessary, replace fuse or faulty wires.
	Fuel cut-off solenoid on injection pump loose or faulty	Tighten solenoid. Check that solenoid clicks when key is turned OFF and ON. Replace faulty solenoid.
	No voltage at glow plug bus	If test light shows no voltage at bus with key at "O" position, test relay and wiring.
	Glow plug faulty	Test and, if necessary, replace glow plug.
	Air in fuel system	Bleed fuel system.
	Injection pump not delivering fue	If no fuel emerges from a looseness injection pipe during cranking, check timing belt and fuel supply from filter.
	Injection pipes misconnected	Connect pipes in correct location
	Injection timing incorrect	Adjust injection timing.
	Faulty injection nozzles	Check and, if necessary, repair or replace nozzles.
	Faulty injection pump	Try to start engine with new pump installed. If necessary, replace pump permanently.
Idle speed incorrect or idle rough irregular	speed incorrectly adjusted	Check and, if necessary, adjust the idle speed.
	Accelerator control binding	Check that lever on pump is not loose, then adjust accelerator cable.
	Loose fuel hose between filter and injection pump	Replace hose or secure with clamps, bleed air from system.
	Inadequate fuel supply owing to clogged fuel filter, or fuel return line and injection pipes leaking, dirty, kinked, or squeezed at connections	Inspect and, if necessary, replace lines and hoses or replace fuel filter.
	Air in fuel system	Bleed fuel system.
	Faulty injection nozzles	Check and, if necessary, repair or replace injection nozzles. .
	Injection timing incorrect	Adjust injection timing.
	Faulty injection pump	Try engine at idle with new pump installed. If necessary, replace pump permanently.

Symptom	Probable cause	Remedy
Smoky exhaust (black, blue or white)	Maximum rpm incorrect	Check and if necessary, replace injection pump.
	Faulty injection nozzles	Check and, if necessary, repair or replace injection nozzles.
	Injection timing incorrect	Adjust injection timing.
	Faulty injection pump	Observe exhaust with new pump installed if necessary, replace pump permanently.
Poor power output, slow acceleration (speedometer accurate, clutch not slipping)	Injection pump accelerator lever loose or not reaching maximum rpm adjusting screw	Tighten lever, check that accelerator pedal travel is not restricted, then adjust accelerator cable.
	Maximum rpm incorrect	Check and, if necessary, replace injection pump.
	Inadequate fuel supply owing to clogged fuel filter, or fuel return line and injection pipes leaking, dirty, kinked, or squeezed at connections	Inspect and, if necessary, replace lines and hoses, replaced fuel filter.
	Air in fuel system	Bleed fuel system.
	Ice or solidified wax in fuel lines. (winter time only)	Move car to a warm garage until ice or wax has become liquid, then bleed fuel system.
	Faulty injection nozzles	Check and, if necessary, repair or replace injection nozzles.
	Injection timing incorrect	Adjust injection timing.
	Faulty injection pump	Check acceleration and speed with new pump installed. If necessary, replace pump permanently.
Excessive fuel consumption	Fuel leaks	Check and, if necessary, replace or tighten all pipes, hoses and connections.
	Return pipe and hose blocked	Check return line for kinks and dents. Replace faulty lines. If line is clogged, blow it out with compressed air, then bleed fuel system.
	Idle speed too fast or maximum rpm too high	Check and, if necessary, adjust idle speed or replace injection pump.
	Injection timing incorrect	Check and, if necessary, repair or replace injection nozzles.
	Faulty injection pump	Check fuel consumption with new pump installed, if unnecessary, replace pump permanently.

HYUNDAI

352102.01 09-06 (STM4988)